7.Цилиндро-конические мотор-редукторы серии К
7.Helical-Bevel Geared Motor K

7.1Исполнение редукторов
7.1Versions of geared motors

Поставляются следующие типы цилиндро-конических мотор-редукторов: The following types of helical-bevel geared motor can be supplied:

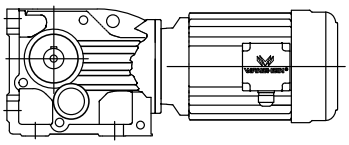
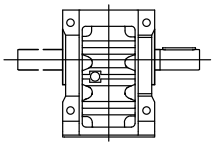

K..D..
Цилиндро-конический мотор-редуктор, устанавливаемый на лапы
Foot-mounted helical-bevel geared motor

KA..BD..
Цилиндро-конический мотор-редуктор с полым валом, устанавливаемый на лапы
Foot-mounted helical-bevel geared motor with hollow shaft.

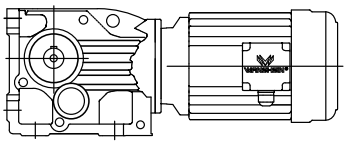
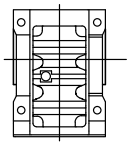

KV..BD..
Цилиндро-конический мотор-редуктор с полым валом и
полым валом для шлицевого соединения по DIN5480, устанавливаемый на лапы
Foot-mounted helical-bevel geared motor with hollow shaft and splined hollow shaft to DIN5480.

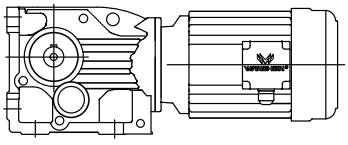
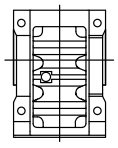

KH..BD..
Цилиндро-конический мотор-редуктор с полым валом и стяжной муфтой, устанавливаемый на лапы
Foot-mounted helical-bevel geared motor with hollow shaft and shrink disk.

KF..D.
Цилиндро-конический мотор-редуктор, устанавливемый с помощью фланца B5
Helical-bevel geared motor in B5 flange-mounted version.

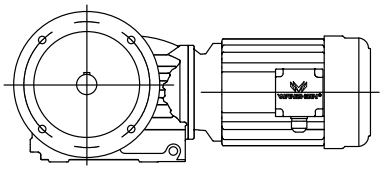
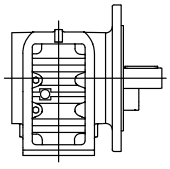

KAF..D..
Цилиндро-конический мотор-редуктор, устанавливемый с помощью фланца B5 и полым валом.
Helical-bevel geared motor in B5 flange-mounted version with hollow shaft.

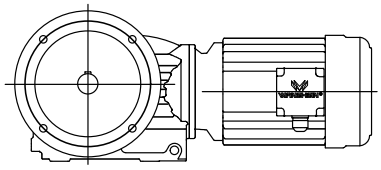
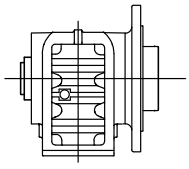

KVF..D..
Цилиндро-конический мотор-редуктор, устанавливемый с помощью фланца B, с полым валом и полым валом для шлицевого соединения по DIN5480.
Helical-bevel geared motor in B5 flange-mounted version with hollow shaft and splined hollow shaft to DIN 5480.

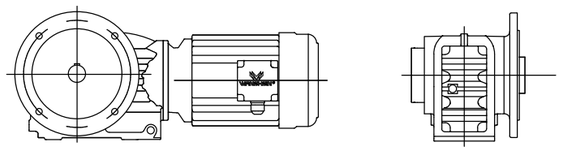

KHF..D..
Цилиндро-конический редуктор, устанавливаемый с помощью фланца B5, полым валом и стяжной муфтой.
Helical-bevel geared motor in B5 flange-mounted version with hollow shaft and shrink disk.

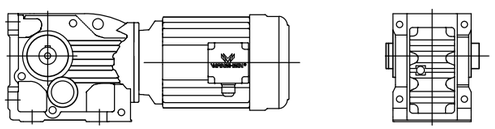

KA..D..
Цилиндро-конический редуктор с полым валом.
Helical-bevel geared motor with hollow shaft .

KV..D..
Цилиндро-конический редуктор с полым валом
для шлицевого соединения по DIN5480
Helical-bevel geared motor with splined hollow shaft to DIN 5480.

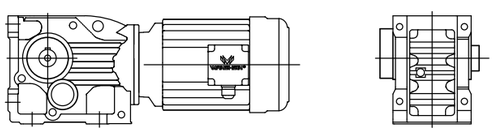

KH..D..
Helical-bevel geared motor with hollow shaft
and shrink disk.
Цилиндро-конический редуктор с полым валом и стяжной муфтой.

KAZ..D..
Цилиндро-конический редуктор с фланцем B14 и полым валом.
Helical-bevel geared motor in B14 flange-mounted version with hollow shaft.

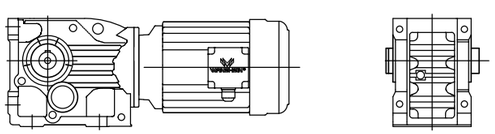

KVZ..D..
Цилиндро-конический редуктор с фланцем B14 и
полым валом для шлицевого соединения по DIN5480.
Helical-bevel geared motor in B14 flange-mounted version with splined hollow shaft to DIN 5480.

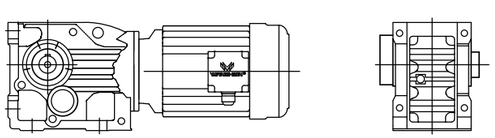

KHZ..D..
Цилиндро-конический редуктор с фланцем B14, полым валом и стяжной муфтой.
Helical-bevel geared motor in B14 flange-mounted version with hollow shaft and shrink disk.

7.2 Вид комбинаций
7.2 Type of Combination

Ниже приведена таблица комбинаций редуктора и электродвигателя с указанием диапазона передаточного числа.The below is combination table between gear box and electro motor in each list the ratio range.

Габариты редуктора Gear unit size	Ступени Stages	D63/71 (0.12-0.37KW)	D80 (0.55-0.75KW)	D90 (1.1-1.5KW)	D100 (2.2-3.0KW)	D112 (4.0KW)	D132S (5.5KW)	D132M (7.5KW)
K/KF/KA/KAF37	3	5.36-106.38	5.36-83.69	5.36-24.99 29.96-72.54	5.36-10.49 13.08-20.19 29.96-58.60			
K/KF/KA/KAF47	3	7.36-11.77 13.65-31.30 39.61-131.87	5.81-104.37	5.81-90.86	5.81-21.18 25.91 35.39-63.30 75.20			
K/KF/KA/KAF57	3	9.59-11.92 19.34-35.70 48.89-145.14	7.55-11.92 15.22-123.85	6.57-108.29	6.57-90.26	6.57-30.28 38.49-76.56		
K/KF/KA/KAF67	3	10.63-12.48 19.30-35.62 48.77-144.79	8.37-12.48 15.19-123.54	7.28-108.03	7.28-90.04	7.28-30.22 38.39-76.37	7.28-24.00 38.39-60.66	7.28-24.00 38.39-60.66
K/KF/KA/KAF77	3	25.62-38.39 64.75-192.18	10.84-12.36 20.25-38.39 51.18-154.02	7.24-135.28	7.24-113.56	7.24-97.05	7.24-30.89 40.04-78.07	7.24-30.89 40.04-78.07
K/KF/KA/KAF87	3		16.00 27.88-31.39 70.46-197.37	11.17 16.00 19.45-31.39 49.16-174.19	8.29-11.17 14.45-147.32	8.29-11.17 14.45-126.91	7.21-102.71	7.21-102.71
K/KF/KA/KAF97	3			24.75-38.30 62.55-176.05	18.96-38.30 47.93-176.05	18.96-38.30 47.93-153.21	8.71-123.93	8.71-123.93
K/KF/KA/KAF107	3				13.43 22.62-29.00 32.69 57.17-143.47	13.43 22.62-29.00 32.69 57.17-143.47	8.69-29.00 32.69-143.47	8.69-29.00 32.69-143.47
K/KF/KA/KAF127	3							12.79 21.15-36.25 47.82-146.07

Габариты редуктора Gear unit size	Ступени Stages	D132ML (9.2KW)	D160M (11KW)	D160L (15KW)	D180 (18.5KW)	D200 (30KW)
K/KF/KA/KAF77	3	7.24-23.08 40.04-58.34	7.24-23.08 40.04-58.34			
K/KF/KA/KAF87	3	7.21-79.34	7.21-79.34	7.21-79.34	7.21-14.45 17.42-24.92 36.52-63.00	
K/KF/KA/KAF97	3	8.71-96.80	8.71-96.80	8.71-96.80	8.71-30.82 41.87-77.89	8.71--24.75 41.87-62.55
K/KF/KA/KAF107	3	8.69-112.41	8.69-112.41	8.69-112.41	8.69-90.96	8.69-31.28 37.00-73.30
K/KF/KA/KAF127	3	10.74-12.79 17.77-136.14	10.74-12.79 17.77-136.14	10.74-12.79 17.77-136.14	8.68-110.18	8.68-89.89
K/KF/KA/KAF157	3		18.37-31.30 46.79-150.41	18.37-31.30 46.79-150.41	14.92-122.39	12.65-100.22
K/KH167	3		24.52-32.25 51.77-164.50	24.52-32.25 51.77-164.50	20.32-32.25 42.89-134.99	17.34-109.83
K/KH187	3		33.23-42.51 88.00-179.86	33.23-42.51 88.00-179.86	27.92-42.51 73.96-179.86	17.18-179.86

Габариты редуктора Gear unit size	Ступени Stages	D225 (37-45KW)	D250M (55KW)	D280 (75-90KW)	D315 (110-132KW)	D315M_A/B (160-200KW)
K/KF/KA/KAF107	3	8.69-31.28 37.00-73.30				
K/KF/KA/KAF127	3	8.68-89.89	8.68-31.37 40.19-70.95	8.68-31.37 40.19-70.95		
K/KF/KA/KAF157	3	12.65-100.22	12.65-79.75	12.65-79.75	12.65-23.95 38.02-61.02	12.65-18.37 38.02-46.79
K/KH167	3	17.34-109.83	17.34-87.86	17.34-87.86	17.34-68.07	17.34-24.52 36.61-51.77
K/KH187	3	17.18-179.86	17.18-144.59	17.18-144.59	17.18-112.60	17.18-33.23 45.50-88.00

7.3 Перед аточное число и максимальный крутящий момент

7.3 Ratio and Max.Torque K37-57

n_a=1400r/min na=1400 об/мин

K37			200Nm	
i	n_a [r/min] [об/мин]	M_{amax} [N/m]	F_{ra} [N]	AD
106.38	13	200	5640	AD_1
97.81	14	200	5640	
83.69	17	200	5640	
72.54	19	200	5520	
67.80	21	200	5360	
58.60	24	200	5020	
49.79	28	200	4660	
44.46	31	200	4420	
37.97	37	200	4100	
35.57	39	200	3970	
29.96	47	200	3650	AD_2
28.83	49	200	3580	
24.99	56	200	3330	
23.36	60	195	3260	
20.19	69	185	3110	
17.15	82	180	2900	
15.31	91	175	2780	
13.08	107	165	2650	
12.14	115	160	2600	
10.49	133	160	2410	
8.91	157	160	2200	
7.96	176	155	2110	
6.80	206	150	1980	
6.37	220	145	1950	
5.36	261	140	1810	

K47			400Nm	
i	n_a [r/min] [об/мин]	M_{amax} [N/m]	F_{ra} [N]	AD
131.87	11	400	5920	AD_2
121.48	12	400	5920	
104.37	13	400	5920	
90.86	15	400	5920	
85.12	16	400	5920	
75.20	19	400	5920	
69.84	20	400	5920	
63.30	22	400	5920	
56.83	25	400	5920	
48.95	29	400	5920	
46.03	30	400	5920	
39.61	35	400	5920	
35.39	40	400	5920	
31.30	45	400	5700	
29.32	48	400	5520	
25.91	54	400	5170	
24.06	58	400	4970	
21.81	64	400	4710	
19.58	72	400	4440	
16.86	83	380	4230	
15.86	88	380	4080	
13.65	103	360	3890	
12.19	115	350	3720	
11.77	119	280	4060	
10.56	133	280	3830	
9.10	154	280	3540	
8.56	164	270	3500	Ad_3
7.36	190	250	3390	
6.58	213	240	3270	
5.81	241	230	3140	

K57			600Nm	
i	n_a [r/min] [об/мин]	M_{amax} [N/m]	F_{ra} [N]	AD
145.14	9.6	600	7470	AD_2
123.85	11	600	7470	
108.29	13	600	7470	
102.88	14	600	7470	
90.26	16	600	7470	
76.56	18	600	7470	
69.12	20	600	7470	
60.81	23	600	7470	
57.42	24	600	7470	
48.89	29	600	7470	
44.43	32	600	7470	
38.49	36	600	7470	
35.70	39	600	7470	
30.28	46	600	7310	
27.34	51	600	6930	
24.05	58	600	6480	
22.71	62	600	6280	
19.34	72	575	5910	
17.57	80	555	5740	
15.22	92	535	5430	AD_3
13.25	106	510	5190	
11.92	117	415	5150	
11.26	124	415	4990	
9.59	146	405	4650	
8.71	161	390	4520	
7.55	185	365	4360	
6.57	213	345	4190	

K 67-87 n_a=1400 r/min na=1400 об/мин

K67			820Nm	
i	n_a [r/min] [об/мин]	M_{amax} [N/m]	F_{ra} [N]	AD
144.79	9.7	820	10300	AD_2
123.54	11	820	10300	
108.03	13	820	10300	
102.62	14	820	10300	
90.04	16	820	10300	
76.37	18	820	10300	
68.95	20	820	10300	
60.66	23	820	10300	
57.28	24	820	10300	
48.77	29	820	10300	
44.32	32	820	10300	
38.39	36	820	10300	
35.62	39	820	10300	
30.22	46	820	10300	AD_3
27.28	51	820	10300	
24.00	58	800	10500	
22.66	62	780	10700	
19.30	73	760	10800	
17.54	80	740	11000	
15.19	92	700	11300	
13.22	106	670	11500	
12.48	112	530	12300	
10.63	132	500	11800	
9.66	145	480	11500	
8.37	167	440	11100	
7.28	192	420	10700	

K77			1550Nm	
i	n_a [r/min] [об/мин]	M_{amax} [N/m]	F_{ra} [N]	AD
192.18	7.3	1450	16100	AD_2
179.37	7.8	1450	16100	
154.02	9.1	1550	15400	
135.28	10	1550	15400	
128.52	11	1550	15400	
113.56	12	1550	15400	
97.05	14	1550	15400	
88.97	16	1550	15400	
78.07	18	1550	15400	
73.99	19	1550	15400	
64.75	22	1550	15400	
58.34	24	1550	15400	
51.18	27	1550	15400	
45.16	31	1550	15400	
40.04	35	1550	15400	AD_3
38.39	36	1550	15400	
35.20	40	1550	15400	
30.89	45	1550	15400	
29.27	48	1550	15400	AD_4
25.62	55	1550	15400	
23.08	61	1550	15400	
20.25	69	1550	15700	
17.87	78	1450	16100	
15.84	88	1400	15500	
13.52	104	1340	14800	
12.36	113	1000	15100	
10.84	129	990	14400	
9.56	146	940	13900	
8.48	165	890	13500	
7.24	193	820	13100	

K87			2700Nm	
i	n_a [r/min] [об/мин]	M_{amax} [N/m]	F_{ra} [N]	AD
197.37	7.1	2700	27300	AD_2
174.19	8.0	2700	27300	
164.34	8.5	2700	27300	
147.32	9.5	2700	27300	
126.91	11	2700	27300	
115.82	12	2700	27300	
102.71	14	2700	27300	
86.34	16	2700	27300	
79.34	18	2700	27300	AD_3
70.46	20	2700	27300	
63.00	22	2700	26200	
56.64	25	2700	25000	
49.16	28	2700	23500	
44.02	32	2600	22800	
36.52	38	2500	21400	
31.39	45	2700	19200	AD_4
27.88	50	2600	18500	
24.92	56	2500	18000	
22.41	62	2300	17900	
19.45	72	2300	16800	
17.42	80	2200	16300	
16.00	87	1800	16000	
14.45	97	2100	15300	
12.56	111	2000	14800	
11.17	125	1500	14900	
10.00	140	1500	14200	AD_5
8.29	169	1400	13500	
7.21	194	1300	13200	

K 97/127 n_a=1400 r/min na=1400 об/мин

K97			4300Nm	
i	n_a [r/min] [об/мин]	M_{amax} [N/m]	F_{ra} [N]	AD
176.05	8.0	4300	40000	AD3
153.21	9.1	4300	40000	
140.28	10	4300	40000	
123.93	11	4300	40000	
105.13	13	4300	40000	
96.80	14	4300	40000	
86.52	16	4300	38800	
77.89	18	4300	37100	
70.54	20	4300	35600	
62.55	22	4300	33800	AD4
56.55	25	4300	32300	
47.93	29	4300	30000	
41.87	33	4300	28300	
38.30	37	4300	27100	AD5
34.23	41	4300	25700	
30.82	45	4300	24500	
27.91	50	4300	23300	
24.75	57	4300	22000	
22.37	63	4300	20900	
18.96	74	4300	19100	
16.56	85	4300	17800	
13.85	101	4300	16100	AD6
11.99	117	3890	16200	
10.41	134	2870	16400	AD5
8.71	161	2660	15800	AD6

K107			8000Nm	
i	n_a [r/min] [об/мин]	M_{amax} [N/m]	F_{ra} [N]	AD
143.47	9.8	8000	65000	AD4
121.46	12	8000	61700	
112.41	12	8000	59700	
100.75	14	8000	57000	
90.96	15	8000	54600	
82.61	17	8000	52400	
73.30	19	8000	49700	
66.52	21	8000	47600	
57.17	24	8000	44400	
49.90	28	7840	42200	
42.33	33	7360	40500	AD5
37.00	38	7200	38500	
32.69	43	7200	36300	
31.28	45	6800	36700	
29.00	48	7200	34000	AD5
26.32	53	7200	32000	
22.62	62	7200	28900	
19.74	71	7200	26100	
16.75	84	7050	23600	
14.64	96	6890	21900	
13.43	104	4300	29200	
11.73	119	4300	27500	
9.94	141	4190	25800	
8.69	161	4070	24600	

K127			13000Nm	
i	n_a [r/min] [об/мин]	M_{amax} [N/m]	F_{ra} [N]	AD
146. 07	9. 6	13000	79200	AD4
136. 14	10	13000	79200	
122. 48	11	13000	79200	
110. 18	13	13000	79200	
89. 89	16	13000	75100	AD5
81. 98	17	13000	72100	
70. 95	20	13000	67700	
62. 60	22	13000	64000	
54. 07	26	13000	59900	
47. 82	29	13000	56500	
40. 19	35	13000	52000	AD6
36.25	39	13000	49400	Ad7
31.37	45	13000	45900	
27.68	51	13000	43000	
23.91	59	13000	39800	
21.15	66	13000	37200	AD8
17.77	79	13000	33600	
14.35	98	12100	31800	
12.79	109	8530	35400	
10.74	130	8000	33900	
8.68	161	7230	32500	

K 157-187 n_a=1400 r/min na=1400 об/мин

K157			18000Nm	
i	n_a [r/min] [об/мин]	M_{amax} [N/m]	F_{ra} [N]	AD
150.41	9.3	18000	112200	AD5
122.39	11	18000	106500	
100.22	14	18000	98000	
91.65	15	18000	94400	
79.75	18	18000	88900	
70.38	20	18000	84200	
61.02	23	18000	79000	
54.29	26	18000	74900	AD6
46.79	30	18000	70000	AD7
38.02	37	18000	63300	
31.30	45	18000	57500	AD8
27.62	51	18000	54000	
23.95	58	18000	50000	
21.31	66	18000	47000	
18.37	76	18000	43200	
14.92	94	18000	38200	
12.65	111	17000	36700	

K167			32000Nm	
i	n_a [r/min] [об/мин]	M_{amax} [N/m]	F_{ra} [N]	AD
164.50	8.5	32000	150000	AD5
134.99	10	32000	150000	AD6
109.83	13	32000	150000	
87.86	16	32000	147200	AD7
78.14	18	32000	140100	
68.07	21	32000	132000	
60.74	23	32000	125600	
51.77	27	32000	117000	AD8
42.89	33	32000	107400	
36.61	38	32000	99700	
32.25	43	32000	93700	
28.77	49	32000	88600	
24.52	57	32000	81700	
20.32	69	32000	74000	
17.34	81	32000	67900	

K187			18000Nm	
i	n_a [r/min] [об/мин]	M_{amax} [N/m]	F_{ra} [N]	AD
179.86	7.8	50000	190000	AD6
165.21	8.5	50000	190000	
144.59	9.7	50000	190000	
129.69	11	50000	188200	AD7
112.60	12	50000	177200	
102.16	14	50000	169900	
88.00	16	50000	159000	AD8
73.96	19	50000	147000	
64.04	22	50000	137500	
53.36	26	50000	126100	
45.50	31	50000	116600	
42.51	33	50000	112700	
38.57	36	50000	107200	
33.23	42	50000	99100	
27.92	50	50000	90200	
24.18	58	47600	86800	
20.15	69	43900	84000	
17.18	81	41400	80800	

K47/57/67RF37 n_a=1400 r/min na=1400 об/мин

K47/RF37			400Nm
i	n_a [r/min] [об/мин]	M_{amax} [N/m]	F_{ra} [N]
10138	0.14	400	5920
8534	0.16	400	5920
7662	0.18	400	5920
6826	0.21	400	5920
5983	0.23	400	5920
5159	0.27	400	5920
4601	0.30	400	5920
3940	0.36	400	5920
3477	0.40	400	5920
3043	0.46	400	5920
2733	0.51	400	5920
2354	0.59	400	5920
2063	0.68	400	5920
1819	0.77	400	5920
1586	0.88	400	5920
1388	1.0	400	5920
1222	1.1	400	5920
1097	1.3	400	5920
945	1.5	400	5920
831	1.7	400	5920
718	1.9	400	5920
639	2.2	400	5920
552	2.5	400	5920
495	2.8	400	5920
426	3.3	400	5920
375	3.7	400	5920
327	4.3	400	5920
289	4.8	400	5920
256	5.5	400	5920
225	6.2	400	5920
198	7.1	400	5920
171	8.2	400	5920
153	9.2	400	5920
131	11	400	5920
112	13	400	5920
99	14	400	5920
94	15	400	5920

K57/RF37			600Nm
i	n_a [r/min] [об/мин]	M_{amax} [N/m]	F_{ra} [N]
12169	0.12	600	7470
11162	0.13	600	7470
9503	0.15	600	7470
8547	0.16	600	7470
7277	0.19	600	7470
6478	0.22	600	7470
5662	0.25	600	7470
5033	0.28	600	7470
4340	0.32	600	7470
3854	0.36	600	7470
3390	0.41	600	7470
2924	0.48	600	7470
2593	0.54	600	7470
2249	0.62	600	7470
1986	0.70	600	7470
1743	0.80	600	7470
1539	0.91	600	7470
1354	1.0	600	7470
1174	1.2	600	7470
1036	1.4	600	7470
906	1.5	600	7470
806	1.7	600	7470
699	2.0	600	7470
615	2.3	600	7470
544	2.6	600	7470
473	3.0	600	7470
421	3.3	600	7470
362	3.9	600	7470
319	4.4	600	7470
280	5.0	600	7470
246	5.7	600	7470
215	6.5	600	7470
192	7.3	600	7470
166	8.4	600	7470
145	9.7	600	7470
129	11	600	7470
111	13	600	7470
97	14	600	7470

K67/RF37			820Nm
i	n_a [r/min] [об/мин]	M_{amax} [N/m]	F_{ra} [N]
12139	0.12	820	10300
11134	0.13	820	10300
9479	0.15	820	10300
8173	0.17	820	10300
7259	0.19	820	10300
6462	0.22	820	10300
5648	0.25	820	10300
4846	0.29	820	10300
4329	0.32	820	10300
3750	0.37	820	10300
3315	0.42	820	10300
2917	0.48	820	10300
2532	0.55	820	10300
2244	0.62	820	10300
1981	0.71	820	10300
1739	0.81	820	10300
1535	0.91	820	10300
1351	1.0	820	10300
1171	1.2	820	10300
1034	1.4	820	10300
903	1.6	820	10300
793	1.8	820	10300
697	2.0	820	10300
613	2.3	820	10300
542	2.6	820	10300
471	3.0	820	10300
420	3.3	820	10300
361	3.9	820	10300
323	4.3	820	10300
279	5.0	820	10300
246	5.7	820	10300
217	6.5	820	10300
191	7.3	820	10300
166	8.4	820	10300
144	9.7	820	10300
122	11	820	10300

Цилиндро-конические мотор-редукторы серии К/ K Helical-Bevel Geared Motor K
Committed to building a world-class electromechanical brand
СОЗДАЕМ ЭЛЕКТРОМЕХАНИЧЕСКИЙ БРЕНД МИРОВОГО КЛАССА

K 77RF37 ,K87/97RF57 n_a=1400r/min na=1400 об/мин

K77/RF37			1550Nm
i	n_a [r/min] [об/мин]	M_{amax} [N/m]	F_{ra} [N]
15310	0.09	1550	15400
14043	0.10	1550	15400
11955	0.12	1550	15400
10217	0.14	1550	15400
8809	0.16	1550	15400
7528	0.19	1550	15400
6606	0.21	1550	15400
5774	0.24	1550	15400
5089	0.28	1550	15400
4489	0.31	1550	15400
3961	0.35	1550	15400
3485	0.40	1550	15400
2901	0.48	1550	15400
2717	0.52	1550	15400
2370	0.59	1550	15400
2050	0.68	1550	15400
1772	0.79	1550	15400
1514	0.92	1550	15400
1388	1.0	1550	15400
1218	1.1	1550	15400
1053	1.3	1550	15400
924	1.5	1550	15400
815	1.7	1550	15400
709	2.0	1550	15400
622	2.3	1550	15400
552	2.5	1550	15400
485	2.9	1550	15400
428	3.3	1550	15400
367	3.8	1550	15400
328	4.3	1550	15400
290	4.8	1550	15400
252	5.6	1550	15400
221	6.3	1550	15400
195	7.2	1550	15400
175	8.0	1550	15400
154	9.1	1550	15400

K87/RF57			2700Nm
i	n_a [r/min] [об/мин]	M_{amax} [N/m]	F_{ra} [N]
14829	0.09	2700	27300
13168	0.11	2700	27300
11737	0.12	2700	27300
10217	0.14	2700	27300
9073	0.15	2700	27300
7854	0.18	2700	27300
6832	0.20	2700	27300
5930	0.24	2700	27300
5240	0.27	2700	27300
4562	0.31	2700	27300
4037	0.35	2700	27300
3609	0.39	2700	27300
3107	0.45	2700	27300
2728	0.51	2700	27300
2371	0.59	2700	27300
2088	0.67	2700	27300
1854	0.76	2700	27300
1657	0.84	2700	27300
1415	0.99	2700	27300
1229	1.1	2700	27300
1078	1.3	2700	27300
951	1.5	2700	27300
837	1.7	2700	27300
726	1.9	2700	27300
638	2.2	2700	27300
562	2.5	2700	27300
474	3.0	2700	27300
426	3.3	2700	27300
373	3.8	2700	27300
330	4.2	2700	27300
294	4.8	2700	27300
250	5.6	2700	27300
236	5.9	2700	27300
201	7.0	2700	27300
183	7.7	2700	27300
159	8.8	2700	27300
141	9.9	2700	27400

K97/RF57			4300Nm
i	n_a [r/min] [об/мин]	M_{amax} [N/m]	F_{ra} [N]
18091	0.08	4300	40000
16666	0.08	4300	40000
14897	0.09	4300	40000
13182	0.11	4300	40000
11677	0.12	4300	40000
10317	0.14	4300	40000
9083	0.15	4300	40000
8054	0.17	4300	40000
6970	0.20	4300	40000
6027	0.23	4300	40000
5391	0.26	4300	40000
4669	0.30	4300	40000
4082	0.34	4300	40000
3583	0.39	4300	40000
3108	0.45	4300	40000
2757	0.51	4300	40000
2419	0.58	4300	40000
2123	0.66	4300	40000
1856	0.75	4300	40000
1625	0.86	4300	40000
1430	0.98	4300	40000
1261	1.1	4300	40000
1102	1.3	4300	40000
957	1.5	4300	40000
855	1.6	4300	40000
743	1.9	4300	40000
652	2.1	4300	40000
573	2.4	4300	40000
504	2.8	4300	40000
437	3.2	4300	40000
382	3.7	4300	40000
342	4.1	4300	40000
305	4.6	4300	40000
258	5.4	4300	40000
232	6.0	4300	40000
199	7.0	4300	40000

K107/127RF77,K127/RF87 n_a=1400 r/min na=1400 об/мин

K107/RF77			8000Nm
i	n_a [r/min] [об/мин]	M_{amax} [N/m]	F_{ra} [N]
14311	0.10	8000	65000
12211	0.11	8000	65000
10677	0.13	8000	65000
9524	0.15	8000	65000
8328	0.17	8000	65000
7270	0.19	8000	65000
6184	0.23	8000	65000
5662	0.25	8000	65000
5138	0.27	8000	65000
4359	0.32	8000	65000
3810	0.37	8000	65000
3358	0.42	8000	65000
2977	0.47	8000	65000
2599	0.54	8000	65000
2286	0.61	8000	65000
1939	0.72	8000	65000
1713	0.82	8000	65000
1554	0.90	8000	65000
1336	1.0	8000	65000
1166	1.2	8000	65000
1030	1.4	8000	65000
904	1.5	8000	65000
793	1.8	8000	65000
696	2.0	8000	65000
615	2.3	8000	65000
522	2.7	8000	65000
461	3.0	8000	65000
408	3.4	8000	65000
364	3.8	8000	65000
318	4.4	8000	65000
286	4.9	8000	65000
251	5.6	8000	65000
222	6.3	8000	65000
196	7.1	8000	65000
174	8.0	7200	65000
154	9.1	7200	65000
140	10	7200	65000

K127/RF77			13000Nm
i	n_a [r/min] [об/мин]	M_{amax} [N/m]	F_{ra} [N]
17550	0.08	13000	79200
16006	0.09	13000	79200
14975	0.09	13000	79200
12440	0.11	13000	79200
10915	0.13	13000	79200
9819	0.14	13000	79200
8443	0.17	13000	79200
7482	0.19	13000	79200
6565	0.21	13000	79200
5804	0.24	13000	79200
5027	0.28	13000	79200
4423	0.32	13000	79200
3889	0.36	13000	79200
3311	0.42	13000	79200
3009	0.47	13000	79200
2607	0.54	13000	79200
2268	0.62	13000	79200
1926	0.73	13000	79200
1757	0.80	13000	79200
1541	0.91	13000	79200
1342	1.0	13000	79200
1177	1.2	13000	79200
1025	1.4	13000	79200
899	1.6	13000	79200
790	1.8	13000	79200
704	2.0	13000	79200
610	2.3	13000	79200
549	2.6	13000	79200
477	2.9	13000	79200
418	3.3	13000	79200

K127/RF87			13000Nm
i	n_a [r/min] [об/мин]	M_{amax} [N/m]	F_{ra} [N]
536	2.6	13000	79200
473	3.0	13000	79200
418	3.3	13000	79200
367	3.8	13000	79200
330	4.2	13000	79200
287	4.9	13000	79200
253	5.5	13000	79200
213	6.6	13000	79200
200	7.0	13000	79200
166	8.4	13000	79200
147	9.5	13000	79200

Цилиндро-конические мотор-редукторы серии К/ K Helical-Bevel Geared Motor K
Committed to building a world-class electromechanical brand
СОЗДАЕМ ЭЛЕКТРОМЕХАНИЧЕСКИЙ БРЕНД МИРОВОГО КЛАССА

K157/RF97,K157/RF107,K167/187/RF97 n_a=1400 r/min na=1400 об/мин

K157/RF97			18000Nm
i	n_a [r/min] [об/мин]	M_{amax} [N/m]	F_{ra} [N]
17679	0.08	18000	112200
15729	0.09	18000	112200
14721	0.10	18000	112200
13097	0.11	18000	112200
11368	0.12	18000	112200
10114	0.14	18000	112200
8718	0.16	18000	112200
7734	0.18	18000	112200
6881	0.20	18000	112200
5931	0.24	18000	112200
5074	0.28	18000	112200
4514	0.31	18000	112200
3979	0.35	18000	112200
3516	0.40	18000	112200
3051	0.46	18000	112200
2610	0.54	18000	112200
2322	0.60	18000	112200
2029	0.69	18000	112200
1805	0.78	18000	112200
1659	0.84	18000	112200
1365	1.0	18000	112200
1229	1.1	18000	112200
1093	1.3	18000	112200
942	1.5	18000	112200
854	1.6	18000	112200
756	1.9	18000	112200
661	2.1	18000	112200
567	2.5	18000	112200
504	2.8	18000	112200
434	3.2	18000	112200
379	3.7	18000	112200
333	4.2	18000	112200
291	4.8	18000	112200

K157/RF107			18000Nm
i	n_a [r/min] [об/мин]	M_{amax} [N/m]	F_{ra} [N]
385	3.6	18000	112200
325	4.3	18000	112200
299	4.7	18000	112200
253	5.5	18000	112200
230	6.1	18000	112200
213	6.6	18000	112200
187	7.5	18000	112200
157	8.9	18000	112200
122	11	18000	112200
107	13	18000	112200

K167/RF97			32000Nm
i	n_a [r/min] [об/мин]	M_{amax} [N/m]	F_{ra} [N]
19723	0.07	32000	15000
17406	0.08	32000	15000
15000	0.09	32000	15000
13238	0.11	32000	15000
11573	0.12	32000	15000
10264	0.14	32000	15000
8628	0.16	32000	15000
6562	0.21	32000	15000
5355	0.26	32000	15000
4788	0.29	32000	15000
4079	0.34	32000	15000
3376	0.41	32000	15000
2755	0.51	32000	15000
2263	0.62	32000	15000
2182	0.64	32000	15000
1704	0.82	32000	15000
1408	0.99	32000	15000
1296	1.1	32000	15000
1101	1.3	32000	15000
944	1.5	32000	15000
843	1.7	32000	15000
757	1.8	32000	15000
632	2.2	32000	15000
561	2.5	32000	15000
481	2.9	32000	15000
423	3.3	32000	15000
369	3.8	32000	15000

K187/RF97,K167/187/RF107, n_a=1400 r/min

K167/RF107			32000Nm
i	n_a [r/min] [об/мин]	M_{amax} [N/m]	F_{ra} [N]
318	4.4	32000	150000
278	5.0	32000	15000
244	5.7	32000	15000
213	6.6	32000	15000
206	6.8	32000	15000
180	7.8	32000	15000
160	8.8	32000	15000
135	10	32000	15000
118	12	32000	15000

K187/RF97			50000Nm
i	n_a [r/min] [об/мин]	M_{amax} [N/m]	F_{ra} [N]
32625	0.04	50000	190000
27165	0.05	50000	190000
24353	0.06	50000	190000
19144	0.07	50000	190000
16978	0.08	50000	190000
14272	0.10	50000	190000
13116	0.11	50000	190000
11647	0.12	50000	190000
10413	0.13	50000	190000
9363	0.15	50000	190000
8126	0.17	50000	190000
7343	0.19	50000	190000
6747	0.21	50000	190000
5991	0.23	50000	190000
5358	0.26	50000	190000
4817	0.29	50000	190000
4370	0.32	50000	190000
3609	0.39	50000	190000
3062	0.46	50000	190000
2818	0.50	50000	190000
2519	0.56	50000	190000
2268	0.62	50000	190000
2054	0.68	50000	190000
1821	0.77	50000	190000
1605	0.87	50000	190000
1395	1.0	50000	190000
1196	1.2	50000	190000
1046	1.3	50000	190000
945	1.5	50000	190000
738	1.9	50000	190000
621	2.3	50000	190000
527	2.7	50000	190000

K187/RF107			50000Nm
i	n_a [r/min] [об/мин]	M_{amax} [N/m]	F_{ra} [N]
835	1.7	50000	190000
729	1.9	50000	190000
622	2.3	50000	190000
520	2.7	50000	190000
454	3.1	50000	190000
355	3.9	50000	190000
261	5.4	50000	190000
221	6.3	50000	190000
193	7.3	50000	190000
163	8.6	50000	190000

7.4 Таблица с критериями выбора
7.4 Selection table

Таблица с критериями выбора редуктора Selection table for gear motors

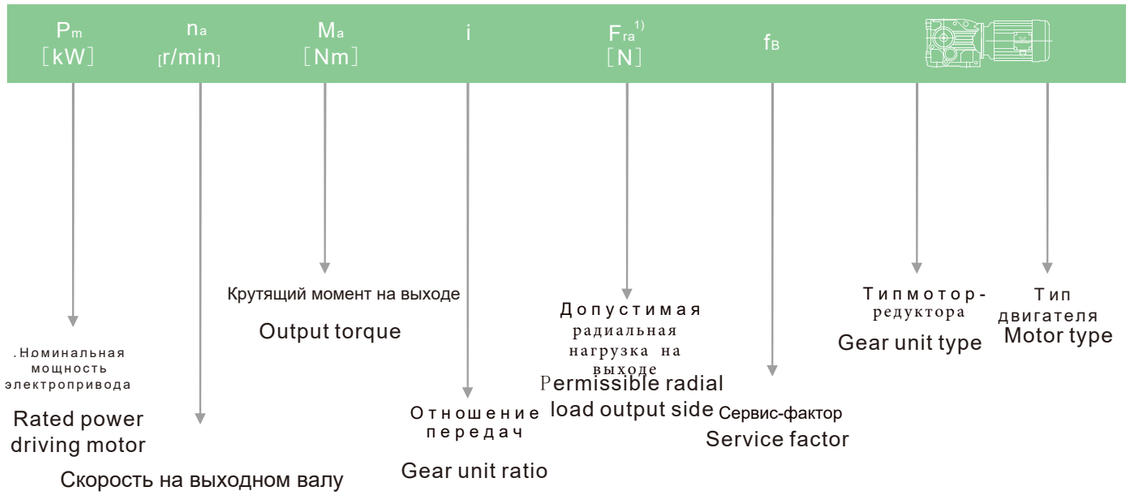

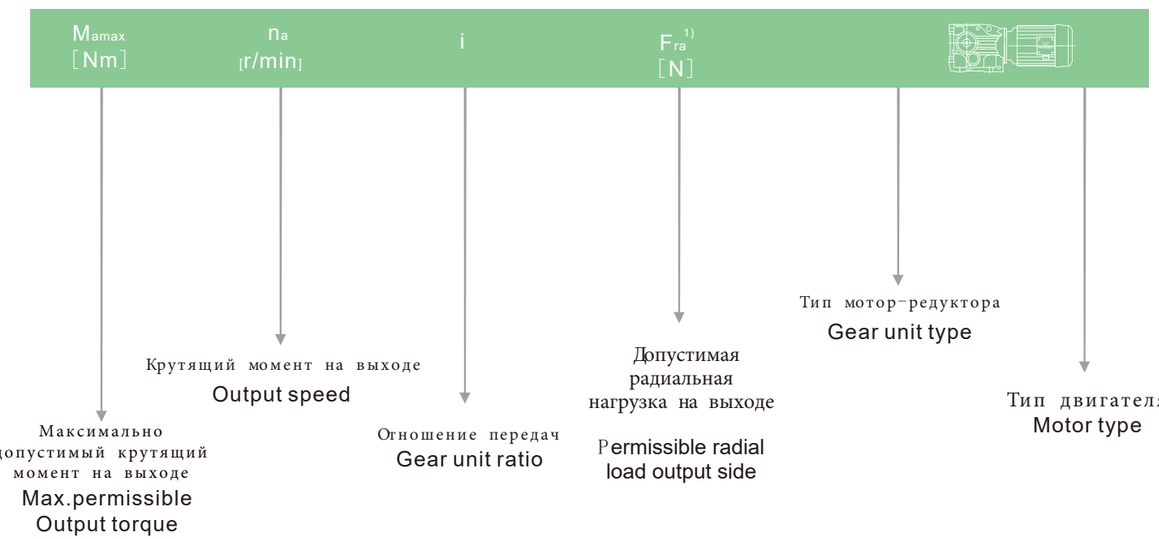

Cuttine
EEXE motor also applicable. *Доступен EExe двигатель.

1 Radial load specified for foot-mounted gear unit with solid shaft. 1) Радиальная нагрузка указана для редуктора с цельным валом, устанавливаемого на лапы.

Примечание: Notce:

Для приводов с низкой скоростью на выходном валу (многоступенчатый мотор-редуктор) мощность двигателя необходимо уменьшить согласно максимально допустимому крутящему моменту редуктора на выходе.
In drives for particularly low output speeds (multi-stage gear motor), the motor power must be limited according to maximum permitted output torque of the gear unit.

Output speed na [r/min] Скорость на выходном валу па [об/мин]	Output torque Ma [N • m] Крутящий момент на выходе Ma [Нм]	Ratio i Передаточное число i	Permitted overhung load FRa [N] Допустимая внешняя радиальная нагрузка FRa [Н]	Service factor fB Сервис-фактор fB	Model Модель
0.12kW					
0.08	11800	17550	79800	1.10	
0.09	10700	16006	80400	1.20	
0.10	9880	14975	80700	1.30	K 127/RF77WSS0.12KW-4
0.11	8010	12440	81500	1.60	KF 127/RF77WSS0.12KW-4
0.13	6920	10915	81800	1.90	KA 127/RF77WSS0.12KW-4
0.14	6320	9819	82000	2.1	KAF127/RF77WSS0.12KW-4
0.16	5220	8443	82300	2.5	
0.18	4820	7482	82300	2.7	
0.10	9590	14311	65000	0.85	
0.11	8060	12211	65000	1.00	
0.13	6930	10677	65000	1.15	
0.14	6280	9524	65000	1.25	K 107/RF77WSS0.12KW-4
0.17	5410	8328	65000	1.50	KF 107/RF77WSS0.12KW-4
0.19	4720	7270	65000	1.70	KA 107/RF77WSS0.12KW-4
0.22	3760	6184	65000	2.1	KAF107/RF77WSS0.12KW-4
0.24	3320	5662	65000	2.4	
0.27	3020	5138	65000	2.7	
0.32	2700	4359	65000	3.0	
0.17	5310	8054	39500	0.80	
0.20	4350	6970	40000	1.00	
0.23	3890	6027	40000	1.10	
0.26	3560	5391	40000	1.20	K 97/RF57WSS0.12KW-4
0.30	2950	4669	40000	1.45	KF 97/RF57WSS0.12KW-4
0.34	2640	4082	40000	1.65	KA 97/RF57WSS0.12KW-4
0.39	2320	3583	40000	1.85	KAF 97/RF57WSS0.12KW-4
0.44	2040	3108	40000	2.1	
0.50	1720	2757	40000	2.5	
0.57	1580	2419	40000	2.7	
0.65	1370	2123	40000	3.2	K 97/RF57WSS0.12KW-4
0.74	1220	1856	40000	3.5	KF 97/RF57WSS0.12KW-4
0.85	1000	1625	40000	4.3	KA 97/RF57WSS0.12KW-4
0.96	860	1430	40000	5.0	KAF 97/RF57WSS0.12KW-4
1.1	830	1261	40000	5.2	
1.2	725	1102	40000	5.9	
0.26	3380	5240	26300	0.80	
0.30	2850	4562	27100	0.95	K 87/RF57WSS0.12KW-4
0.34	2610	4037	27400	1.05	KF 87/RF57WSS0.12KW-4
0.38	2330	3609	27700	1.15	KA 87/RF57WSS0.12KW-4
0.44	1990	3107	28100	1.35	KAF 87/RF57WSS0.12KW-4
0.51	1700	2728	28300	1.60	
0.58	1500	2371	28500	1.80	
0.66	1380	2088	28600	1.95	
0.74	1220	1854	28700	2.2	
0.83	1090	1657	28700	2.5	K 87/RF57WSS0.12KW-4
0.97	930	1415	28800	2.9	KF 87/RF57WSS0.12KW-4
1.1	800	1229	28900	3.4	KA 87/RF57WSS0.12KW-4
1.3	695	1078	28900	3.9	KAF 87/RF57WSS0.12KW-4
1.5	585	951	29000	4.6	
1.6	505	837	29000	5.4	
1.9	435	726	29000	6.2	
0.51	1790	2717	13400	0.85	K 77/RF37WSS0.12KW-4
0.58	1510	2370	15700	1.05	KF 77/RF37WSS0.12KW-4
					KA 77/RF37WSS0.12KW-4
					KAF 77/RF37WSS0.12KW-4
0.67	1380	2050	16500	1.10	
0.78	1180	1772	17500	1.30	
0.91	1010	1514	18300	1.55	
0.99	920	1388	18600	1.70	K 77/RF37WSS0.12KW-4
1.1	810	1218	19000	1.90	KF 77/RF37WSS0.12KW-4
1.3	710	1053	19200	2.2	KA 77/RF37WSS0.12KW-4
1.5	620	924	19500	2.5	KAF 77/RF37WSS0.12KW-4
1.7	550	815	19600	2.8	
2.0	440	709	19800	3.5	
2.2	385	622	19900	4.0	

Output speed na [r/min] Скорость на выходном валу па [об/мин]	Output torque Ma [N • m] Крутящий момент на выходе Ma [Нм]	Ratio i Передаточное число i	Permitted overhung load FRa [N] Допустимая внешняя радиальная нагрузка FRa [Н]	Service factor fB Сервис-фактор fB	Model Модель
0.12kW					
1.0	930	1351	9230	0.90	
1.2	795	1171	10500	1.05	
1.3	695	1034	11300	1.20	
1.5	585	903	12000	1.40	
1.7	545	793	12200	1.50	
2.0	440	697	12700	1.85	K 67/RF37 WSS0.12KW-4
2.2	390	613	12900	2.1	KF 67/RF37 WSS0.12KW-4
2.5	340	542	13000	2.4	KA 67/RF37 WSS0.12KW-4
2.9	315	471	13000	2.6	KAF 67/RF37 WSS0.12KW-4
3.3	265	420	13000	3.1	
3.8	235	361	13000	3.5	
4.3	210	323	13000	3.9	
4.9	176	279	13000	4.7	
5.6	155	246	13000	5.3	
6.3	134	217	13000	6.1	
1.5	585	906	7750	1.05	
1.7	525	806	8220	1.15	
2.0	445	699	8690	1.35	
2.2	390	615	8930	1.55	
2.5	340	544	9120	1.75	K 57/RF37WSS0.12KW-4
2.9	310	473	9250	1.95	KF 57/RF37WSS0.12KW-4
3.3	265	421	9420	2.3	KA 57/RF37WSS0.12KW-4
3.8	235	362	9510	2.5	KAF 57/RF37WSS0.12KW-4
4.3	210	319	9610	2.9	
4.9	176	280	9710	3.4	
5.6	155	246	9770	3.9	
6.4	135	215	9830	4.4	
7.2	122	192	9860	4.9	
2.2	430	639	2520	0.95	
2.5	370	552	6350	1.10	
2.8	315	495	6930	1.25	K 47/RF37WSS0.12KW-4
3.2	280	426	7240	1.45	KF 47/RF37WSS0.12KW-4
3.7	235	375	7560	1.70	KA 47/RF37WSS0.12KW-4
4.2	215	327	7670	1.85	KAF 47/RF37WSS0.12KW-4
4.8	189	289	7830	2.1	
6.2	184	144.79	13000	4.4	K 67 WSS0.12KW-6 KF 67 WSS0.12KW-6 KA 67 WSS0.12KW-6 KAF 67 WSS0.12KW-6
6.2	185	145.14	9680	3.2	
7.3	158	123.85	9760	3.8	K 57 WSS0.12KW-6
8.3	138	108.29	9820	4.3	KF 57 WSS0.12KW-6
8.8	131	102.88	9840	4.6	KA 57 WSS0.12KW-6
10	115	90.26	9880	5.2	KAF 57 WSS0.12KW-6
12	98	76.56	9930	6.2	
9.5	121	145.14	9870	5.0	
11	103	123.85	9920	5.8	K 57 WSS0.12KW-4
13	90	108.29	9950	6.7	KF 57 WSS0.12KW-4
13	85	102.88	9960	7.0	KA 57 WSS0.12KW-4
15	75	90.26	9990	8.0	KAF 57 WSS0.12KW-4
6.8	168	131.87	7930	2.4	K 47 WSS0.12KW-6
7.4	155	121.48	7990	2.6	KF 47 WSS0.12KW-6
8.6	133	104.37	8070	3.0	KA 47 WSS0.12KW-6
					KAF 47 WSS0.12KW-6
10	110	131.87	8140	3.7	K 47 WSS0.12KW-4
11	101	121.48	8170	4.0	KF 47 WSS0.12KW-4
					KA 47 WSS0.12KW-4
					KAF 47 WSS0.12KW-4
8.5	136	106.38	6230	1.50	K 37 WSS0.12KW-6
9.2	125	97.81	6300	1.60	KF 37 WSS0.12KW-6
11	107	83.69	6410	1.90	KA 37 WSS0.12KW-6
12	92	72.54	6480	2.2	KAF 37 WSS0.12KW-6

Output speed n_a [r/min] Скорость на выходном валу па [об/мин]	Output torque M_a [N・m] Крутящий момент на выходе Ма [Нм]	Ratio i Передат очное число i	Permitted overhung load F_{Ra} [N] Допустимая внешняя радиальная нагрузка FRa [Н]	Service factor f_B Сервис-фактор fB	Model Модель
0.12kW					
13	88	106.38	6500	2.3	K 37 WSS0.12KW-4 KF 37 WSS0.12KW-4 KA 37 WSS0.12KW-4 KAF 37 WSS0.12KW-4
14	81	97.81	6530	2.5	
16	70	83.69	6570	2.9	
19	60	72.54	6600	3.3	
20	56	67.80	6610	3.5	
24	49	58.60	6430	4.1	
28	41	49.79	6130	4.8	
31	37	44.46	5930	5.4	
36	32	37.97	5660	6.3	
39	30	35.57	5550	6.8	
46	25	29.96	5270	8.0	
48	24	28.83	5210	8.4	
55	21	24.99	4980	9.6	
59	19	23.36	4880	10	
68	17	20.19	4660	11	
80	14	17.15	4430	13	
90	13	15.31	4280	14	
105	11	13.08	4070	15	
114	10	12.14	3970	16	
0.18kW					
0.09	16300	14975	73200	0.80	K 127/RF77 WSS0.18KW-4 KF 127/RF77 WSS0.18KW-4 KA 127/RF77 WSS0.18KW-4 KAF 127/RF77 WSS0.18KW-4
0.11	13400	12440	79000	0.95	
0.12	11600	10915	79900	1.10	
0.13	10500	9819	80400	1.25	
0.16	8850	8443	81100	1.45	
0.18	8040	7482	81400	1.60	
0.20	6990	6565	81800	1.85	
0.23	5940	5804	82100	2.2	
0.26	5220	5027	82300	2.5	
0.30	4530	4423	82400	2.9	
0.34	3960	3889	82500	3.3	
0.40	3310	3311	82600	3.9	
0.16	8990	8328	65000	0.90	K 107/RF77 WSS0.18KW-4 KF 107/RF77 WSS0.18KW-4 KA 107/RF77 WSS0.18KW-4 KAF 107/RF77 WSS0.18KW-4
0.18	7850	7270	65000	1.00	
0.21	6420	6184	65000	1.25	
0.23	5760	5662	65000	1.40	
0.26	5230	5138	65000	1.55	
0.30	4570	4359	65000	1.75	
0.35	4000	3810	65000	2.0	
0.39	3440	3358	65000	2.3	
0.44	3090	2977	65000	2.6	
0.51	2700	2599	65000	3.0	
0.58	2340	2286	65000	3.4	
0.28	4960	4669	39900	0.85	K 97/RF57WSS0.18KW-4 KF 97/RF57WSS0.18KW-4 KA 97/RF57WSS0.18KW-4 KAF 97/RF57WSS0.18KW-4
0.32	4390	4082	40000	1.00	
0.37	3860	3583	40000	1.10	
0.42	3370	3108	40000	1.25	
0.48	2910	2757	40000	1.50	
0.55	2640	2419	40000	1.65	K 97/RF57WSS0.18KW-4 KF 97/RF57WSS0.18KW-4 KA 97/RF57WSS0.18KW-4 KAF 97/RF57WSS0.18KW-4
0.62	2290	2123	40000	1.95	
0.71	2030	1856	40000	2.1	
0.81	1710	1625	40000	2.5	
0.92	1490	1430	40000	2.9	
1.0	1380	1261	40000	3.1	
1.2	1210	1102	40000	3.6	
1.4	1040	957	40000	4.1	
1.5	930	855	40000	4.6	
1.8	755	743	40000	5.7	
2.0	675	652	40000	6.4	
0.42	3330	3107	26400	0.80	K 87/RF57WSS0.18KW-4 KF 87/RF57WSS0.18KW-4 KA 87/RF57WSS0.18KW-4 KAF 87/RF57WSS0.18KW-4
0.48	2880	2728	27100	0.95	
0.56	2520	2371	27500	1.05	

Output speed n_a [r/min] Скорость на выходном валу па [об/мин]	Output torque M_a [N・m] Крутящий момент на выходе Ма [Нм]	Ratio i Передат очное число i	Permitted overhung load F_{Ra} [N] Допустимая внешняя радиальная нагрузка FRa [Н]	Service factor f_B Сервис-фактор fB	Model Модель
0.18kW					
0.63	2290	2088	27800	1.20	K 87/RF57WSS0.18KW-4 KF 87/RF57WSS0.18KW-4 KA 87/RF57WSS0.18KW-4 KAF 87/RF57WSS0.18KW-4
0.71	2030	1854	28000	1.35	
0.80	1820	1657	28200	1.50	
0.93	1540	1415	28400	1.75	
1.1	1340	1229	28600	2.0	
1.2	1160	1078	28700	2.3	
1.4	1000	951	28800	2.7	
1.6	870	837	28800	3.1	
1.8	755	726	28900	3.6	
0.87	1670	1514	14500	0.95	K 77/RF37WSS0.18KW-4 KF 77/RF37WSS0.18KW-4 KA 77/RF37WSS0.18KW-4 KAF 77/RF37WSS0.18KW-4
0.95	1530	1388	15500	1.00	
1.1	1340	1218	16700	1.15	
1.2	1170	1053	17600	1.35	
1.4	1030	924	18200	1.50	
1.6	910	815	18700	1.70	
1.9	750	709	19100	2.1	
2.1	655	622	19400	2.4	
2.4	590	552	19500	2.6	
2.7	515	485	19700	3.0	
3.1	455	428	19800	3.4	
3.6	400	367	19900	3.9	
1.5	980	903	5660	0.85	K 67/RF37WSS0.18KW-4 KF 67/RF37WSS0.18KW-4 KA 67/RF37WSS0.18KW-4 KAF 67/RF37WSS0.18KW-4
1.7	890	793	9620	0.90	
1.9	745	697	10900	1.10	
2.2	655	613	11600	1.25	
2.4	580	542	12000	1.40	
2.8	520	471	12300	1.60	
3.2	445	420	12600	1.85	
3.7	395	361	12800	2.1	
4.1	350	323	13000	2.3	
4.7	295	279	13000	2.8	
2.2	660	615	5580	0.90	K 57/RF37WSS0.18KW-4 KF 57/RF37WSS0.18KW-4 KA 57/RF37WSS0.18KW-4 KAF 57/RF37WSS0.18KW-4
2.4	580	544	7800	1.05	
2.8	515	473	8300	1.15	
3.1	450	421	8670	1.35	
3.6	395	362	8900	1.50	
4.1	350	319	9100	1.75	
4.7	300	280	9290	2.0	
5.4	260	246	9420	2.3	
6.1	230	215	9540	2.6	
6.9	205	192	9610	2.9	
7.9	178	166	9700	3.4	
3.5	400	375	5930	1.00	K 47/RF37WSS0.18KW-4 KF 47/RF37WSS0.18KW-4 KA 47/RF37WSS0.18KW-4 KAF 47/RF37WSS0.18KW-4
4.0	360	327	6440	1.10	
4.6	315	289	6920	1.25	
5.2	275	256	7290	1.45	
5.9	245	225	7500	1.65	
6.7	210	198	7710	1.90	
7.7	183	171	7860	2.2	
8.6	164	153	7950	2.4	
10	142	131	8040	2.8	
6.0	285	144.79	13000	2.9	K 67 WSS0.18KW-6 KF 67 WSS0.18KW-6 KA 67 WSS0.18KW-6 KAF 67 WSS0.18KW-6
7.0	245	123.54	13000	3.4	
8.1	215	108.03	13000	3.8	
8.5	205	102.62	13000	4.0	
9.1	189	144.79	13000	4.3	K 67 WSS0.18KW-4 KF 67 WSS0.18KW-4 KA 67 WSS0.18KW-4 KAF 67 WSS0.18KW-4
11	161	123.54	13000	5.1	
12	141	108.03	13000	5.8	
6.0	285	145.14	9340	2.1	K 57 WSS0.18KW-6 KF 57 WSS0.18KW-6 KA 57 WSS0.18KW-6 KAF 57 WSS0.18KW-6
7.0	245	123.85	9480	2.5	
8.0	215	108.29	9590	2.8	
8.5	205	102.88	9620	3.0	
9.6	178	90.26	9700	3.4	

Output speed n_a [r/min] Скорость на выходном валу па [об/мин]	Output torque M_a [N・m] Крутящий момент на выходе Ма [Нм]	Ratio i Передат очное число i	Permitted overhung load F_{Ra} [N] Допустимая внешняя радиальная нагрузка FRa [Н]	Service factor f_B Сервис-фактор fB	Model Модель
0.18kW					
9.1	189	145.14	9670	3.2	K 57 WSS0.18KW-4 KF 57 WSS0.18KW-4 KA 57 WSS0.18KW-4 KAF 57 WSS0.18KW-4
11	161	123.85	9750	3.7	
12	141	108.29	9810	4.3	
13	134	102.88	9830	4.5	
15	118	90.26	9880	5.1	
17	100	76.56	9920	6.0	
6.6	260	131.87	7380	1.55	K 47 WSS0.18KW-6 KF 47 WSS0.18KW-6 KA 47 WSS0.18KW-6 KAF 47 WSS0.18KW-6
7.2	240	121.48	7530	1.65	
8.3	205	104.37	7740	1.95	
9.6	180	90.86	7880	2.2	
10	168	85.12	7930	2.4	
10	172	131.87	7910	2.3	K 47 WSS0.18KW-4 KF 47 WSS0.18KW-4 KA 47 WSS0.18KW-4 KAF 47 WSS0.18KW-4
11	158	121.48	7970	2.5	
13	136	104.37	8060	2.9	
15	118	90.86	8120	3.4	
16	111	85.12	8140	3.6	
8.2	210	106.38	5520	0.95	K 37 WSS0.18KW-6 KF 37 WSS0.18KW-6 KA 37 WSS0.18KW-6 KAF 37 WSS0.18KW-6
8.9	193	97.81	5710	1.05	
10	165	83.69	5990	1.20	
12	143	72.54	6170	1.40	
12	139	106.38	6210	1.45	K 37 WSS0.18KW-4 KF 37 WSS0.18KW-4 KA 37 WSS0.18KW-4 KAF 37 WSS0.18KW-4
14	127	97.81	6280	1.55	
16	109	83.69	6400	1.85	
18	95	72.54	6470	2.1	
19	88	67.80	6500	2.3	
23	76	58.60	6280	2.6	
27	65	49.79	6010	3.1	
30	58	44.46	5830	3.5	K 37 WSS0.18KW-4 KF 37 WSS0.18KW-4 KA 37 WSS0.18KW-4 KAF 37 WSS0.18KW-4
35	49	37.97	5580	4.1	
37	46	35.57	5480	4.3	
44	39	29.96	5220	5.1	
46	38	28.83	5160	5.3	
53	33	24.99	4950	6.2	
57	30	23.36	4850	6.4	
65	26	20.19	4650	7.0	
77	22	17.15	4430	8.1	
86	20	15.31	4280	8.8	
101	17	13.08	4080	9.7	
109	16	12.14	3980	10	
126	14	10.49	3810	12	
148	12	8.91	3620	14	
166	10	7.96	3490	15	
0.25kW					
0.13	15300	9819	75300	0.85	K 127/RF77WSS0.25KW-4 KF 127/RF77WSS0.25KW-4 KA 127/RF77WSS0.25KW-4 KAF 127/RF77WSS0.25KW-4
0.15	13000	8443	79200	1.00	
0.17	11700	7482	79900	1.10	
0.20	10200	6565	80600	1.30	
0.22	8770	5804	81200	1.50	
0.26	7670	5027	81600	1.70	
0.29	6680	4423	81900	1.95	
0.33	5850	3889	82100	2.2	
0.39	4930	3311	82300	2.6	

Output speed n_a [r/min] Скорость на выходном валу па [об/мин]	Output torque M_a [N・m] Крутящий момент на выходе Ма [Нм]	Ratio i Передат очное число i	Permitted overhung load F_{Ra} [N] Допустимая внешняя радиальная нагрузка FRa [Н]	Service factor f_B Сервис-фактор fB	Model Модель
0.25kW					
0.21	9400	6184	65000	0.85	K 107/RF77WSS0.25KW-4 KF 107/RF77WSS0.25KW-4 KA 107/RF77WSS0.25KW-4 KAF 107/RF77WSS0.25KW-4
0.23	8520	5662	65000	0.95	
0.25	7730	5138	65000	1.05	
0.30	6700	4359	65000	1.20	
0.34	5850	3810	65000	1.35	
0.39	5070	3358	65000	1.60	
0.44	4540	2977	65000	1.75	
0.50	3970	2599	65000	2.0	
0.57	3450	2286	65000	2.3	
0.67	2930	1939	65000	2.7	
0.76	2640	1713	65000	3.0	K 107/RF77WSS0.25KW-4 KF 107/RF77WSS0.25KW-4 KA 107/RF77WSS0.25KW-4 KAF 107/RF77WSS0.25KW-4
0.84	2390	1554	65000	3.3	
0.97	2060	1336	65000	3.9	
0.42	4890	3108	40000	0.90	K 97/RF57WSS0.25KW-4 KF 97/RF57WSS0.25KW-4 KA 97/RF57WSS0.25KW-4 KAF 97/RF57WSS0.25KW-4
0.47	4250	2757	40000	1.00	
0.54	3840	2419	40000	1.10	K 97/RF57WSS0.25KW-4 KF 97/RF57WSS0.25KW-4 KA 97/RF57WSS0.25KW-4 KAF 97/RF57WSS0.25KW-4
0.61	3340	2123	40000	1.30	
0.70	2950	1856	40000	1.45	
0.80	2520	1625	40000	1.70	
0.91	2190	1430	40000	1.95	
1.0	2010	1261	40000	2.1	
1.2	1750	1102	40000	2.5	
1.4	1520	957	40000	2.8	
1.5	1360	855	40000	3.2	
0.62	3320	2088	26400	0.80	K 87/RF57WSS0.25KW-4 KF 87/RF57WSS0.25KW-4 KA 87/RF57WSS0.25KW-4 KAF 87/RF57WSS0.25KW-4
0.70	2950	1854	27000	0.90	
0.78	2640	1657	27400	1.00	
0.92	2250	1415	27800	1.20	
1.1	1950	1229	28100	1.40	
1.2	1700	1078	28300	1.60	
1.4	1470	951	28500	1.85	
1.5	1280	837	28600	2.1	
1.8	1110	726	28700	2.4	
2.0	990	638	28800	2.7	
1.2	1690	1053	14300	0.90	K 77/RF37WSS0.25KW-4 KF 77/RF37WSS0.25KW-4 KA 77/RF37WSS0.25KW-4 KAF 77/RF37WSS0.25KW-4
1.4	1480	924	15800	1.05	
1.6	1310	815	16900	1.20	
1.8	1100	709	17900	1.40	
2.1	960	622	18400	1.60	
2.3	860	552	18000	1.80	
2.7	755	485	19100	2.0	
3.0	665	428	19300	2.3	
3.5	580	367	19500	2.7	K 77/RF37WSS0.25KW-4 KF 77/RF37WSS0.25KW-4 KA 77/RF37WSS0.25KW-4 KAF 77/RF37WSS0.25KW-4
4.0	515	328	19700	3.0	
4.5	460	290	19800	3.4	
5.2	395	252	19900	3.9	
5.9	345	221	19900	4.5	
6.7	305	195	20000	5.1	
7.4	270	175	20000	5.7	
2.1	960	613	7350	0.85	K 67/RF37WSS0.25KW-4 KF 67/RF37WSS0.25KW-4 KA 67/RF37WSS0.25KW-4 KAF 67/RF37WSS0.25KW-4
2.4	850	542	10100	0.95	
2.8	755	471	10900	1.10	
3.1	655	420	11600	1.25	
3.6	575	361	12000	1.45	
4.0	510	323	12400	1.60	
4.7	435	279	12700	1.90	
5.3	385	246	12900	2.1	
6.0	335	217	13000	2.4	

Output speed n_a [r/min] Скорость на выходном валу na [об/мин]	Output torque M_a [N • m] Крутящий момент на выходе Ma [Нм]	Ratio i Передат очное число i	Permitted overhung load F_{Ra} [N] Допустимая внешняя радиальная нагрузка FRa [Н]	Service factor f_B Сервис-фактор fB		Model Модель
0.25kW						
3.1	655	421	5750	0.90	K KF KA KAF	57/RF37WSS0.25KW-4 57/RF37WSS0.25KW-4 57/RF37WSS0.25KW-4 57/RF37WSS0.25KW-4
3.6	575	362	7840	1.05		
4.1	505	319	8380	1.20		
4.7	435	280	8720	1.35		
5.3	385	246	8950	1.55		
6.1	335	215	9150	1.80		
6.8	300	192	9280	2.0		
7.8	260	166	9430	2.3		
9.0	225	145	9550	2.7		
10	205	129	9620	2.9		
12	173	111	9720	3.5		
13	152	97	9780	4.0		
4.4	540	154.02	19600	2.9	K 77	WSS0.25KW-8
5.0	475	135.28	19700	3.3	KF 77	WSS0.25KW-8
5.3	450	128.52	19800	3.4	KA 77	WSS0.25KW-8
6.0	400	113.56	19900	3.9	KAF 77	WSS0.25KW-8
4.6	520	192.18	19700	2.8	K 77	WSS0.25KW-6
4.9	485	179.37	19700	3.0	KF 77	WSS0.25KW-6
5.7	420	154.02	19800	3.7	KA 77	WSS0.25KW-6
6.5	365	135.28	19900	4.2	KAF 77	WSS0.25KW-6
5.5	435	123.54	12700	1.90	K 67	WSS0.25KW-8
6.3	380	108.03	12900	2.2	KF 67	WSS0.25KW-8
6.6	360	102.62	12900	2.3	KA 67	WSS0.25KW-8
7.6	315	90.04	13000	2.6	KAF 67	WSS0.25KW-8
6.1	395	144.79	12800	2.1	K 67	WSS0.25KW-6
7.1	335	123.54	13000	2.5	KF 67	WSS0.25KW-6
8.1	395	108.03	13000	2.8	KA 67	WSS0.25KW-6
8.6	280	102.62	13000	3.0	KAF 67	WSS0.25KW-6
9.0	265	144.79	13000	3.1	K 67	WSS0.25KW-4
11	225	123.54	13000	3.6	KF 67	WSS0.25KW-4
12	198	108.03	13000	4.1	KA 67	WSS0.25KW-4
13	189	102.62	13000	4.3	KAF 67	WSS0.25KW-4
6.1	395	145.14	8910	1.50		
7.1	335	123.85	9150	1.80	K 57	WSS0.25KW-6
8.1	295	108.29	9310	2.0	KF 57	WSS0.25KW-6
8.6	280	102.88	9360	2.2	KA 57	WSS0.25KW-6
9.8	245	90.26	9480	2.5	KAF 57	WSS0.25KW-6
11	210	76.56	9610	2.9		
9.0	265	145.14	9410	2.2		
11	225	123.85	9540	2.6	K 57	WSS0.25KW-4
12	199	108.29	9640	3.0	KF 57	WSS0.25KW-4
13	189	102.88	9670	3.2	KA 57	WSS0.25KW-4
14	166	90.26	9740	3.6	KAF 57	WSS0.25KW-4
17	141	76.56	9810	4.3		
6.7	360	131.87	6470	1.10		
7.2	330	121.48	6780	1.20	K 47	WSS0.25KW-6
8.4	285	104.37	7210	1.40	KF 47	WSS0.25KW-6
9.7	245	90.86	7480	1.60	KA 47	WSS0.25KW-6
10	230	85.12	7590	1.75	KAF 47	WSS0.25KW-6
9.9	240	131.87	7510	1.65	K 47	WSS0.25KW-4
11	225	121.48	7640	1.80	KF 47	WSS0.25KW-4
12	192	104.37	7820	2.1	KA 47	WSS0.25KW-4
14	167	90.86	7930	2.4	KAF 47	WSS0.25KW-4
15	156	85.12	7980	2.6		
11	225	83.69	5300	0.90		
12	197	72.54	5680	1.00	K 37	WSS0.25KW-6
13	184	67.80	5810	1.10	KF 37	WSS0.25KW-6
15	159	58.60	6050	1.25	KA 37	WSS0.25KW-6
18	135	49.79	6230	1.50	KAF 37	WSS0.25KW-6

Output speed n_a [r/min] Скорость на выходном валу na [об/мин]	Output torque M_a [N • m] Крутящий момент на выходе Ma [Нм]	Ratio i Передат очное число i	Permitted overhung load F_{Ra} [N] Допустимая внешняя радиальная нагрузка FRa [Н]	Service factor f_B Сервис-фактор fB		Model Модель
0.25kW						
12	195	106.38	5690	1.00		
13	180	97.81	5860	1.10		
16	154	83.69	6090	1.30		
18	133	72.54	6250	1.50		
19	125	67.80	6230	1.60		
22	108	58.60	6030	1.85		
26	91	49.79	5810	2.2		
29	82	44.46	5650	2.5		
34	70	37.97	5430	2.9		
37	65	35.57	5340	3.1		
43	55	29.96	5100	3.6	K 37	WSS0.25KW-4
45	53	28.83	5050	3.8	KF 37	WSS0.25KW-4
52	46	24.99	4860	4.4	KA 37	WSS0.25KW-4
56	43	23.36	4770	4.6	KAF 37	WSS0.25KW-4
64	37	20.19	4580	5.0		
76	32	17.15	4370	5.7		
85	28	15.31	4230	6.2		
99	24	13.08	4030	6.9		
107	22	12.14	3940	7.2		
124	19	10.49	3780	8.3		
146	16	8.91	3590	9.8		
163	15	7.96	3470	11		
191	13	6.80	3310	12		
204	12	6.37	3240	12		
0.37kW						
0.18	16600	7482	72600	0.80		
0.21	14500	6565	76900	0.90	K 127/RF77WSS0.37KW-4	
0.24	12600	5804	79400	1.05	KF 127/RF77WSS0.37KW-4	
0.27	11000	5027	80200	1.20	KA 127/RF77WSS0.37KW-4	
0.31	9610	4432	80800	1.35	KAF 127/RF77WSS0.37KW-4	
0.35	8430	3889	81300	1.55		
0.42	7120	3311	81700	1.85		
0.72	4230	1926	82500	3.1	K 127/RF77WSS0.37KW-4	
0.79	3860	1757	82500	3.4	KF 127/RF77WSS0.37KW-4	
0.90	3360	1541	82600	3.9	KA 127/RF77WSS0.37KW-4 KAF 127/RF77WSS0.37KW-4	
0.36	8380	3810	65000	0.95		
0.41	7300	3358	65000	1.10	K 107/RF77WSS0.37KW-4	
0.46	6510	2977	65000	1.25	KF 107/RF77WSS0.37KW-4	
0.53	5690	2599	65000	1.40	KA 107/RF77WSS0.37KW-4	
0.60	4970	2286	65000	1.60	KAF 107/RF77WSS0.37KW-4	
0.71	4210	1939	65000	1.90		
0.81	3790	1713	65000	2.1	K 107/RF77WSS0.37KW-4	
0.89	3440	1554	65000	2.3	KF 107/RF77WSS0.37KW-4	
1.0	2950	1336	65000	2.7	KA 107/RF77WSS0.37KW-4	
1.2	2580	1166	65000	3.1	KAF 107/RF77WSS0.37KW-4	
0.65	4770	2123	40000	0.90		
0.74	4200	1856	40000	1.00		
0.85	3610	1625	40000	1.20		
0.96	3160	1430	40000	1.35	K 97/RF57WSS0.37KW-4	
1.1	2850	1261	40000	1.50	KF 97/RF57WSS0.37KW-4	
1.2	2490	1102	40000	1.70	KA 97/RF57WSS0.37KW-4	
1.4	2160	957	40000	2.0	KAF 97/RF57WSS0.37KW-4	
1.6	1930	855	40000	2.2		
1.9	1620	743	40000	2.7		
2.1	1430	652	40000	3.0		
2.4	1280	573	40000	3.4		
0.97	3200	1415	26600	0.85		
1.1	2770	1229	27200	0.95		
1.3	2420	1078	27600	1.10		
1.5	2110	951	27900	1.30	K 87/RF57WSS0.37KW-4	
1.6	1850	837	28200	1.45	KF 87/RF57WSS0.37KW-4	
1.9	1600	726	28400	1.70	KA 87/RF57WSS0.37KW-4	
2.2	1420	638	28500	1.90	KAF 87/RF57WSS0.37KW-4	
2.5	1240	562	28600	2.2		
2.9	1040	474	28800	2.6		
3.2	940	426	28800	2.9		
3.7	810	373	28900	3.3		

Output speed n_a [r/min] Скорость на выходном валу na [об/мин]	Output torque M_a [N • m] Крутящий момент на выходе Ma [Нм]	Ratio i Передат очное число i	Permitted overhung load F_{Ra} [N] Допустимая внешняя радиальная нагрузка FRa [Н]	Service factor f_B Сервис-фактор fB		Model Модель
0.37kW						
1.7	1860	815	10600	0.85		
2.0	1580	709	15200	1.00		
2.2	1380	622	16500	1.10		
2.5	1230	552	17300	1.25		
2.8	1080	485	18000	1.45		
3.2	950	428	18500	1.60	K 77/RF37WSS0.37KW-4	
3.8	830	367	18900	1.85	KF 77/RF37WSS0.37KW-4	
4.2	735	328	19200	2.1	KA 77/RF37WSS0.37KW-4	
4.8	655	290	19400	2.4	KAF 77/RF37WSS0.37KW-4	
5.5	565	252	19600	2.8		
6.2	495	221	19700	3.1		
7.1	435	195	19800	3.5		
7.9	390	175	19900	4.0		
9.0	340	154	19900	4.5		
3.3	940	420	9000	0.90		
3.8	820	361	10300	1.00		
4.3	725	323	11100	1.15		
4.9	625	279	11800	1.30	K 67/RF37 WSS0.37KW-4	
5.6	550	246	12200	1.50	KF 67/RF37 WSS0.37KW-4	
6.3	485	217	12500	1.70	KA 67/RF37 WSS0.37KW-4	
7.2	430	191	12700	1.90	KAF 67/RF37 WSS0.37KW-4	
8.3	370	166	12900	2.2		
9.6	320	144	13000	2.5		
11	275	122	13000	3.0		
4.9	625	280	7430	0.95		
5.6	550	246	8040	1.10		
6.4	480	215	8520	1.25		
7.2	430	192	8750	1.40	K 57/RF37WSS0.37KW-4	
8.3	370	166	9000	1.60	KF 57/RF37WSS0.37KW-4	
9.6	325	145	9200	1.85	KA 57/RF37WSS0.37KW-4	
11	290	129	9320	2.1	KAF 57/RF37WSS0.37KW-4	
12	245	111	9480	2.4		
14	215	97	9580	2.8		
3.9	910	174.19	28800	3.0	K 87 WSS0.37KW-8	
4.1	850	164.34	28900	3.2	KF 87 WSS0.37KW-8	
4.6	765	147.32	28900	3.5	KA 87 WSS0.37KW-8 KAF 87 WSS0.37KW-8	
4.6	775	197.37	28900	3.5	K 87 WSS0.37KW-6	
5.2	685	174.19	28900	4.0	KF 87 WSS0.37KW-6 KA 87 WSS0.37KW-6 KAF 87 WSS0.37KW-6	
5.0	705	135.28	19300	2.2	K 77 WSS0.37KW-8	
5.3	670	128.52	19300	2.3	KF 77 WSS0.37KW-8	
6.0	590	113.56	19500	2.6	KA 77 WSS0.37KW-8	
7.0	505	97.05	19700	3.1	KAF 77 WSS0.37KW-8	
5.8	605	154.02	19500	2.6	K 77 WSS0.37KW-6	
6.7	530	135.28	19600	2.9	KF 77 WSS0.37KW-6	
7.0	505	128.52	19700	3.1	KA 77 WSS0.37KW-6	
7.9	445	113.56	19800	3.5	KAF 77 WSS0.37KW-6	
7.2	490	192.18	19700	3.0	K 77 WSS0.37KW-4	
7.7	460	179.37	19800	3.2	KF 77 WSS0.37KW-4	
9.0	395	154.02	19900	3.9	KA 77 WSS0.37KW-4 KAF 77 WSS0.37KW-4	
6.3	560	108.03	12100	1.45	K 67 WSS0.37KW-8	
6.6	535	102.62	12300	1.55	KF 67 WSS0.37KW-8	
7.6	470	90.04	12600	1.75	KA 67 WSS0.37KW-8 KAF 67 WSS0.37KW-8	
7.3	485	123.54	12500	1.70	K 67 WSS0.37KW-6	
8.3	425	108.03	12700	1.95	KF 67 WSS0.37KW-6	
8.8	405	102.62	12800	2.0	KA 67 WSS0.37KW-6	
10	355	90.04	13000	2.3	KAF 67 WSS0.37KW-6	
9.5	370	144.79	12900	2.2		
11	315	123.54	13000	2.6	K 67 WSS0.37KW-4	
13	275	108.03	13000	3.0	KF 67 WSS0.37KW-4	
15	230	90.04	13000	3.6	KA 67 WSS0.37KW-4	
18	196	76.37	13000	4.2	KAF 67 WSS0.37KW-4	

Output speed n_a [r/min] Скорость на выходном валу na [об/мин]	Output torque M_a [N • m] Крутящий момент на выходе Ma [Нм]	Ratio i Передат очное число i	Permitted overhung load F_{Ra} [N] Допустимая внешняя радиальная нагрузка FRa [Н]	Service factor f_B Сервис-фактор fB		Model Модель
0.37kW						
7.3	485	123.85	8490	1.25		
8.3	425	108.29	8770	1.40	K 57 WSS0.37KW-6	
8.8	405	102.88	8870	1.50	KF 57 WSS0.37KW-6	
10	355	90.26	9070	1.70	KA 57 WSS0.37KW-6	
12	300	76.56	9280	2.0	KAF 57 WSS0.37KW-6	
13	270	69.12	9390	2.2		
9.5	370	145.14	9000	1.60		
11	315	123.85	9220	1.90	K 57 WSS0.37KW-4	
13	275	108.29	9370	2.2	KF 57 WSS0.37KW-4	
13	265	102.88	9420	2.3	KA 57 WSS0.37KW-4	
15	230	90.26	9530	2.6	KAF 57 WSS0.37KW-4	
18	196	76.56	9650	3.1		
20	177	69.12	9700	3.4		
8.6	410	104.37	5490	1.0	K 47 WSS0.37KW-6	
9.9	355	90.86	6480	1.10	KF 47 WSS0.37KW-6	
11	335	85.12	6730	1.20	KA 47 WSS0.37KW-6	
12	295	75.20	7100	1.35	KAF 47 WSS0.37KW-6	
10	340	131.87	6690	1.20	K 47 WSS0.37KW-6	
11	310	121.48	6960	1.30	KF 47 WSS0.37KW-6	
13	265	104.37	7330	1.50	KA 47 WSS0.37KW-6	
					KAF 47 WSS0.37KW-6	
15	235	90.86	7580	1.70	K 47 WSS0.37KW-4	
16	220	85.12	7670	1.85	KF 47 WSS0.37KW-4	
18	193	75.20	7810	2.1	KA 47 WSS0.37KW-4	
20	179	69.80	7880	2.2	KAF 47 WSS0.37KW-4	
22	162	63.30	7960	2.5		
14	250	97.81	2520	0.80		
16	215	83.69	5470	0.95		
19	186	72.54	5690	1.10		
20	174	67.80	5630	1.15		
24	150	58.60	5510	1.35		
28	128	49.79	5350	1.55		
31	114	44.46	5230	1.75		
36	97	37.97	5060	2.1		
39	91	35.57	4990	2.2		
46	77	29.96	4800	2.6		
48	74	28.83	4750	2.7	K 37 WSS0.37KW-4	
55	64	24.99	4590	3.1	KF 37 WSS0.37KW-4	
59	60	23.36	4510	3.3	KA 37 WSS0.37KW-4	
68	52	20.19	4350	3.6	KAF 37 WSS0.37KW-4	
80	44	17.15	4160	4.1		
90	39	15.31	4040	4.5		
105	34	13.08	3860	4.9		
114	31	12.14	3780	5.1		
132	27	10.49	3630	5.9		
155	23	8.91	3460	7.0		
176	20	7.96	3350	7.6		
203	17	6.80	3190	8.6		
217	16	6.37	3130	8.9		
257	14	5.36	2970	10		
0.55kW						
0.08	55900	16978	179800	0.90		
0.10	46500	14272	190000	1.10		
0.11	42500	13116	190000	1.20	K 187/RF97WSS0.55KW-4	
0.12	37400	11647	190000	1.35		
0.19	23900	7343	190000	2.1		
0.12	38400	11573	150000	0.85		
0.13	33800	10264	150000	0.95		
0.16	28100	8628	150000	1.15		
0.21	21400	6562	150000	1.50	K 167/RF97WSS0.55KW-4	
0.25	17200	5355	150000	1.85		
0.33	13200	4079	150000	2.4		

Output speed n_a [r/min] Скорость на выходном валу na [об/мин]	Output torque M_a [N・m] Крутящий момент на выходе Ma [Нм]	Ratio i Передат очное число i	Permitted overhung load F_{Ra} [N] Допустимая внешняя радиальная нагрузка FRa [Н]	Service factor f_B Сервис-фактор fB	Model Модель
0.55kW					
0.20	22400	6881	109700	0.80	K 157/RF97WSS0.55KW-4
0.23	19300	5931	111500	0.95	KF 157/RF97WSS0.55KW-4
0.34	13000	3979	114400	1.40	KA 157/RF97WSS0.55KW-4
0.45	9940	3051	115300	1.80	KAF 157/RF97WSS0.55KW-4
0.31	14900	4423	76200	0.85	K 127/RF77WSS0.55KW-4
0.35	13000	3889	79200	1.00	KF 127/RF77WSS0.55KW-4
0.41	11100	3311	80200	1.20	KA 127/RF77WSS0.55KW-4
0.45	10000	3009	80700	1.30	KAF 127/RF77WSS0.55KW-4
0.52	8630	2607	81200	1.50	
0.71	6560	1926	81900	2.0	K 127/RF77WSS0.55KW-4
0.77	5980	1757	82100	2.2	KF 127/RF77WSS0.55KW-4
0.88	5220	1541	82300	2.5	KA 127/RF77WSS0.55KW-4
1.0	4570	1342	82400	2.8	KAF 127/RF77WSS0.55KW-4
1.2	3990	1177	82500	3.3	
1.3	3490	1025	82600	3.7	
0.46	10100	2977	65000	0.80	K 107/RF77WSS0.55KW-4
0.52	8770	2599	65000	0.90	KF 107/RF77WSS0.55KW-4
0.59	7690	2286	65000	1.05	KA 107/RF77WSS0.55KW-4
0.70	6520	1939	65000	1.25	KAF 107/RF77WSS0.55KW-4
0.79	5850	1713	65000	1.35	
0.87	5310	1554	65000	1.50	
1.0	4570	1336	65000	1.75	K 107/RF77WSS0.55KW-4
1.2	3990	1166	65000	2.0	KF 107/RF77WSS0.55KW-4
1.3	3450	1030	65000	2.3	KA 107/RF77WSS0.55KW-4
1.5	3000	904	65000	2.7	KAF 107/RF77WSS0.55KW-4
1.7	2700	793	65000	3.0	
2.0	2360	696	65000	3.4	
2.2	2050	615	65000	3.9	
0.95	4880	1430	40000	0.90	
1.1	4380	1261	40000	1.00	
1.2	3820	1102	40000	1.15	
1.4	3320	957	40000	1.30	
1.6	2960	855	40000	1.45	K 97/RF57WSS0.55KW-4
1.8	2520	743	40000	1.70	KF 97/RF57WSS0.55KW-4
2.1	2220	652	40000	1.95	KA 97/RF57WSS0.55KW-4
2.4	1970	573	40000	2.2	KAF 97/RF57WSS0.55KW-4
2.7	1700	504	40000	2.5	
3.1	1470	437	40000	2.9	
3.6	1300	382	40000	3.3	
4.5	1040	305	40000	4.1	
1.4	3260	951	26500	0.85	
1.6	2860	837	27100	0.95	
1.9	2480	726	27600	1.10	
2.1	2190	638	27900	1.25	
2.4	1920	562	28100	1.40	
2.9	1620	474	28400	1.65	K 87/RF57WSS0.55KW-4
3.2	1450	426	28500	1.85	KF 87/RF57WSS0.55KW-4
3.6	1260	373	28600	2.1	KA 87/RF57WSS0.55KW-4
4.1	1110	330	28700	2.4	KAF 87/RF57WSS0.55KW-4
4.6	990	294	28800	2.7	
5.4	850	250	28900	3.2	
5.8	800	236	28900	3.4	
6.8	680	201	28900	4.0	
2.5	1900	552	5780	0.80	
2.8	1670	485	14500	0.95	
3.2	1470	428	15900	1.05	
3.7	1270	367	17100	1.20	K 77/RF37WSS0.55KW-4
4.2	1130	328	17800	1.35	KF 77/RF37WSS0.55KW-4
4.7	1000	290	18300	1.55	KA 77/RF37WSS0.55KW-4
5.4	870	252	18800	1.80	KAF 77/RF37WSS0.55KW-4
6.2	760	221	19100	2.0	
7.0	670	195	19300	2.3	
7.8	600	175	19500	2.6	
8.8	530	154	19600	2.9	

Output speed n_a [r/min] Скорость на выходном валу na [об/мин]	Output torque M_a [N・m] Крутящий момент на выходе Ma [Нм]	Ratio i Передат очное число i	Permitted overhung load F_{Ra} [N] Допустимая внешняя радиальная нагрузка FRa [Н]	Service factor f_B Сервис-фактор fB	Model Модель
0.55kW					
4.9	960	279	7360	0.85	
5.5	840	246	10100	0.95	
6.2	745	217	10900	1.10	K 67/RF37WSS0.55KW-4
7.1	660	191	11500	1.25	KF 67/RF37WSS0.55KW-4
8.2	570	166	12100	1.45	KA 67/RF37WSS0.55KW-4
9.4	495	144	12400	1.65	KAF 67/RF37WSS0.55KW-4
11	420	122	12700	1.95	
7.1	660	192	5180	0.90	
8.2	575	166	7850	1.05	K 57/RF37 WSS0.55KW-4
9.4	495	145	8430	1.20	KF 57/RF37 WSS0.55KW-4
11	445	129	8680	1.35	KA 57/RF37 WSS0.55KW-4
12	380	111	8970	1.60	KAF 57/RF37 WSS0.55KW-4
14	335	97	9150	1.80	
3.9	1350	174.19	28600	2.0	K 87 WSS0.55KW-8
4.1	1270	164.34	28600	2.1	KF 87 WSS0.55KW-8
4.6	1140	147.32	28700	2.4	KA 87 WSS0.55KW-8
					KAF 87 WSS0.55KW-8
4.6	1150	197.37	28700	2.3	K 87 WSS0.55KW-6
5.2	1020	174.19	28800	2.7	KF 87 WSS0.55KW-6
5.5	960	164.34	28800	2.8	KA 87 WSS0.55KW-6
6.1	860	147.32	28900	3.1	KAF 87 WSS0.55KW-6
5.0	1040	135.28	18100	1.50	K 77 WSS0.55KW-8
5.3	990	128.52	18300	1.55	KF 77 WSS0.55KW-8
6.0	880	113.56	18700	1.75	KA 77 WSS0.55KW-8
7.0	750	97.05	19100	2.1	KAF 77 WSS0.55KW-8
5.8	900	154.02	18700	1.70	K 77 WSS0.55KW-6
6.7	790	135.28	19000	1.95	KF 77 WSS0.55KW-6
7.0	750	128.52	19100	2.1	KA 77 WSS0.55KW-6
7.9	665	113.56	19400	2.3	KAF 77 WSS0.55KW-6
8.8	595	154.02	19500	2.6	
10	520	135.28	19700	3.0	K 77 WSS0.55KW-4
11	495	128.52	19700	3.1	KF 77 WSS0.55KW-4
12	440	113.56	19800	3.5	KA 77 WSS0.55KW-4
14	375	97.05	19900	4.1	KAF 77 WSS0.55KW-4
7.3	720	123.54	11100	1.15	
8.3	630	108.03	11700	1.30	K 67 WSS0.55KW-6
8.8	600	102.62	11900	1.35	KF 67 WSS0.55KW-6
10	525	90.04	12300	1.55	KA 67 WSS0.55KW-6
12	445	76.37	12600	1.85	KAF 67 WSS0.55KW-6
11	475	123.54	12500	1.70	K 67 WSS0.55KW-4
13	415	108.03	12800	1.95	KF 67 WSS0.55KW-4
15	350	90.04	13000	2.4	KA 67 WSS0.55KW-4
18	295	76.37	13000	2.8	KAF 67 WSS0.55KW-4
8.3	630	108.29	7360	0.95	
8.8	600	102.88	7630	1.00	
10	525	90.26	8220	1.15	K 57 WSS0.55KW-6
12	445	76.56	8670	1.35	KF 57 WSS0.55KW-6
13	405	69.12	8870	1.50	KA 57 WSS0.55KW-6
15	355	60.81	9070	1.70	KAF 57 WSS0.55KW-6
16	335	57.42	9150	1.80	
11	480	123.85	8520	1.25	
13	420	108.29	8800	1.45	
13	395	102.88	8890	1.50	K 57 WSS0.55KW-4
15	350	90.26	9100	1.70	KF 57 WSS0.55KW-4
18	295	76.56	9300	2.0	KA 57 WSS0.55KW-4
20	265	69.12	9410	2.2	KAF 57 WSS0.55KW-4
22	235	60.81	9520	2.6	
24	220	57.42	9560	2.7	
13	405	104.37	5880	1.00	
15	350	90.86	6550	1.15	K 47 WSS0.55KW-4
16	330	85.12	6790	1.20	KF 47 WSS0.55KW-4
18	290	75.20	7150	1.40	KA 47 WSS0.55KW-4
19	270	69.84	7310	1.50	KAF 47 WSS0.55KW-4

Цилиндро-конические мотор-редукторы серии K/ K Helical-Bevel Geared Motor K
Committed to building a world-class electromechanical brand
СОЗДАЕМ ЭЛЕКТРОМЕХАНИЧЕСКИЙ БРЕНД МИРОВОГО КЛАССА

Output speed n_a [r/min] Скорость на выходном валу na [об/мин]	Output torque M_a [N・m] Крутящий момент на выходе Ma [Нм]	Ratio i Передат очное число i	Permitted overhung load F_{Ra} [N] Допустимая внешняя радиальная нагрузка FRa [Н]	Service factor f_B Сервис-фактор fB	Model Модель
0.55kW					
21	245	63.30	7500	1.65	K 47 WSS0.55KW-4
24	220	56.83	7660	1.80	KF 47 WSS0.55KW-4
28	189	48.95	7830	2.1	KA 47 WSS0.55KW-4
30	178	46.03	7880	2.2	KAF 47 WSS0.55KW-4
23	225	58.60	4850	0.90	
27	192	49.79	4790	1.05	
31	172	44.46	4740	1.15	
36	147	37.97	4640	1.35	
38	137	35.57	4600	1.45	
45	116	29.96	4470	1.75	
47	11	28.83	4440	1.80	
54	97	24.99	4320	2.1	
58	90	23.36	4260	2.2	K 37 WSS0.55KW-4
67	78	20.19	4130	2.4	KF 37 WSS0.55KW-4
79	66	17.15	3980	2.7	KA 37 WSS0.55KW-4
89	59	15.31	3880	3.0	KAF 37 WSS0.55KW-4
104	54	13.08	3730	3.3	
112	47	12.14	3660	3.4	
130	41	10.49	3520	4.0	
153	34	8.91	3370	4.7	
171	31	7.96	3270	5.1	
200	26	6.80	3130	5.7	
214	25	6.37	3070	5.9	
254	21	5.36	2920	6.8	
0.75kW					
0.11	58400	13116	175300	0.85	
0.12	51500	11647	187300	0.95	
0.19	32800	7343	190000	1.50	K 187/RF97WSS0.75KW-4
0.20	30000	6747	190000	1.65	
0.23	26500	5991	190000	1.90	
0.16	38600	8628	150000	0.85	
0.21	29300	6562	150000	1.10	
0.26	23700	5355	150000	1.35	K 167/RF97WSS0.75KW-4
0.34	18200	4079	150000	1.75	
0.41	15100	3376	150000	2.1	
					K 157/RF97WSS0.75KW-4
0.35	17800	3979	112300	1. 00	KF 157/RF97WSS0.75KW-4
0.45	13600	3051	114100	1. 30	KA 157/RF97WSS0.75KW-4
					KAF157/RF97WSS0.75KW-4
					K 157/RF97WSS0.75KW-4
0.83	7440	1659	115900	2.4	KF 157/RF97WSS0.75KW-4
1.0	6040	1365	116200	3.0	KA 157/RF97WSS0.75KW-4
					KAF157/RF97WSS0.75KW-4
					K 127/RF77WSS0.75KW-4
0.42	15100	3311	75800	0.85	KF 127/RF77WSS0.75KW-4
0.46	13700	3009	78600	0.95	KA 127/RF77WSS0.75KW-4
0.53	11800	2607	79800	1.10	KAF127/RF77WSS0.75KW-4
0.72	8930	1926	81100	1.45	
0.79	8150	1757	81400	1.60	K 127/RF77WSS0.75KW-4
0.90	7120	1541	81700	1.85	KF 127/RF77WSS0.75KW-4
1.0	6220	1342	82000	2.1	KA 127/RF77WSS0.75KW-4
1.2	5440	1177	82200	2.4	KAF127/RF77WSS0.75KW-4
1.4	4750	1025	82400	2.7	
1.5	4150	899	82500	3.1	
0.81	7960	1713	65000	1.00	
0.89	7230	1554	65000	1.10	
1.0	6210	1336	65000	1.30	K 107/RF77WSS0.75KW-4
1.2	5420	1166	65000	1.50	KF 107/RF77WSS0.75KW-4
1.3	4710	1030	65000	1.70	KA 107/RF77WSS0.75KW-4
1.5	4120	904	65000	1.95	KAF107/RF77WSS0.75KW-4
1.7	3680	793	65000	2.2	
2.0	3210	696	65000	2.5	
2.2	2800	615	65000	2.8	

Output speed n_a [r/min] Скорость на выходном валу na [об/мин]	Output torque M_a [N・m] Крутящий момент на выходе Ma [Нм]	Ratio i Передат очное число i	Permitted overhung load F_{Ra} [N] Допустимая внешняя радиальная нагрузка FRa [Н]	Service factor f_B Сервис-фактор fB	Model Модель
0.75kW					
1.2	5180	1102	39700	0.85	
1.4	4490	957	40000	0.95	
1.6	4020	855	40000	1.05	
1.9	3430	743	40000	1.25	
2.1	3020	652	40000	1.40	K 97/RF57 WSS0.75KW-4
2.4	2680	573	40000	1.60	KF 97/RF57 WSS0.75KW-4
2.7	2320	504	40000	1.85	KA 97/RF57 WSS0.75KW-4
3.2	2010	437	40000	2.1	KAF 97/RF57 WSS0.75KW-4
3.6	1770	382	40000	2.4	
4.5	1420	305	40000	3.0	
5.4	1190	258	40000	3.6	
5.9	1080	232	40000	4.0	
6.9	920	199	40000	4.7	
1.9	3370	726	26300	0.80	
2.2	2970	638	26900	0.90	
2.5	2610	562	27400	1.05	
2.9	2200	474	27900	1.25	K 87/RF57WSS0.75KW-4
3.2	1980	426	28100	1.35	KF 87/RF57WSS0.75KW-4
3.7	1720	373	28300	1.55	KA 87/RF57WSS0.75KW-4
4.2	1520	330	28500	1.80	KAF 87/RF57WSS0.75KW-4
4.7	1350	294	28600	2.0	
5.5	1160	250	28700	2.3	
5.8	1100	236	28700	2.5	
6.9	930	201	28800	2.9	
3.8	1720	367	14000	0.90	
4.2	1540	328	15500	1.00	K 77/RF37WSS0.75KW-4
4.8	1360	290	16600	1.15	KF 77/RF37WSS0.75KW-4
5.5	1180	252	17500	1.30	KA 77/RF37WSS0.75KW-4
6.2	1030	221	18200	1.50	KAF 77/RF37WSS0.75KW-4
3.9	1830	176.05	40000	2.3	K 97 WSS0.75KW-8
4.5	1590	153.21	40000	2.7	KF 97 WSS0.75KW-8
4.9	1460	140.28	40000	3.0	KA 97 WSS0.75KW-8
					KAF 97 WSS0.75KW-8
4.7	1530	147.32	28500	1.75	K 87 WSS0.75KW-8
5.4	1320	126.91	28600	2.0	KF 87 WSS0.75KW-8
6.0	1200	115.82	28700	2.2	KA 87 WSS0.75KW-8
6.7	1070	102.71	28700	2.5	KAF 87 WSS0.75KW-8
5.2	1390	174.19	28600	1.95	K 87 WSS0.75KW-6
5.5	1310	164.34	28600	2.1	KF 87 WSS0.75KW-6
6.1	1170	147.32	28700	2.3	KA 87 WSS0.75KW-6
7.1	1010	126.91	28800	2.7	KAF 87 WSS0.75KW-6
7.0	1020	197.37	28800	2.6	K 87 WSS0.75KW-4
7.9	900	174.19	28800	3.0	KF 87 WSS0.75KW-4
8.4	850	164.34	28900	3.2	KA 87 WSS0.75KW-4
9.4	765	147.32	28900	3.5	KAF 87 WSS0.75KW-4
6.7	1080	135.28	18000	1.45	
7.0	1020	128.52	18200	1.50	K 77 WSS0.75KW-6
7.9	900	113.56	18700	1.70	KF 77 WSS0.75KW-6
9.3	770	97.05	19100	2.0	KA 77 WSS0.75KW-6
10	710	88.97	19200	2.2	KAF 77 WSS0.75KW-6
9.0	800	154.02	19000	1.95	
10	700	135.28	19300	2.2	K 77 WSS0.75KW-4
11	665	128.52	19300	2.3	KF 77 WSS0.75KW-4
12	590	113.56	19500	2.6	KA 77 WSS0.75KW-4
14	505	97.05	19700	3.1	KAF 77 WSS0.75KW-4
11	640	123.54	11700	1.30	K 67 WSS0.75KW-4
13	560	108.03	12100	1.45	KF 67 WSS0.75KW-4
15	465	90.04	12600	1.75	KA 67 WSS0.75KW-4
					KAF 67 WSS0.75KW-4
18	395	76.37	12800	2.1	K 67 WSS0.75KW-4
20	362	68.95	13000	2.3	KF 67 WSS0.75KW-4
23	315	60.66	13000	2.6	KA 67 WSS0.75KW-4
24	295	57.28	13000	2.8	KAF 67 WSS0.75KW-4

Output speed n_a [r/min] Скорость на выходном валу па [об/мин]	Output torque M_a [N • m] Крутящий момент на выходе Ма [Нм]	Ratio i Передаточное число i	Permitted overhung load F_{Ra} [N] Допустимая внешняя радиальная нагрузка FRa [Н]	Service factor f_B Сервис-фактор fB	Model Модель		
0.75kW							
11	645	123.85	7130	0.95			
13	560	108.29	7940	1.05			
13	535	102.88	8160	1.10			
15	470	90.26	8570	1.30			
18	395	76.56	8890	1.50	K	57	WSS0.75KW-4
20	360	69.12	9060	1.65	KF	57	WSS0.75KW-4
23	315	60.81	9230	1.90	KA	57	WSS0.75KW-4
24	300	57.42	9290	2.0	KAF	57	WSS0.75KW-4
28	255	48.89	9450	2.4			
31	230	44.43	9530	2.6			
18	390	75.20	6060	1.00	K	47	WSS0.75KW-4
20	365	69.84	6410	1.10	KF	47	WSS0.75KW-4
22	330	63.30	6790	1.20	KA	47	WSS0.75KW-4
					KAF	47	WSS0.75KW-4
24	295	56.83	7110	1.35			
28	255	48.95	7430	1.55	K	47	WSS0.75KW-4
30	240	46.03	7540	1.65	KF	47	WSS0.75KW-4
35	205	39.61	7740	1.95	KA	47	WSS0.75KW-4
39	184	35.39	7760	2.2	KAF	47	WSS0.75KW-4
44	162	31.30	7550	2.5			
31	230	44.46	4170	0.85			
36	197	37.97	4150	1.00			
39	185	35.57	4140	1.10			
46	156	29.96	4080	1.30			
48	150	28.83	4060	1.35			
55	130	24.99	3990	1.55			
59	121	23.36	3950	1.60			
68	105	20.19	3860	1.75	K	37	WSS0.75KW-4
80	89	17.15	3750	2.0	KF	37	WSS0.75KW-4
90	80	15.31	3670	2.2	KA	37	WSS0.75KW-4
105	68	13.08	3550	2.4	KAF	37	WSS0.75KW-4
114	63	12.14	3500	2.5			
132	54	10.49	3380	2.9			
155	46	8.91	3250	3.5			
173	41	7.96	3160	3.8			
203	35	6.80	3030	4.2			
217	33	6.37	2980	4.4			
257	28	5.36	2840	5.0			
1.1kW							
0.15	60700	9363	171000	0.80			
0.17	52400	8126	185900	0.95			
0.19	48300	7343	190000	1.05	K	187/RF97	WSS1.1KW-4
0.21	44300	6747	190000	1.15			
0.23	39200	5991	190000	1.30			
0.26	34900	5358	190000	1.45			
0.29	31200	4871	190000	1.60			
0.32	28300	4370	190000	1.80			
0.26	35000	5355	150000	0.90			
0.29	31200	4788	150000	1.05			
0.34	26800	4079	150000	1.20	K	167/RF97	WSS1.1KW-4
0.41	22200	3376	150000	1.45			
0.51	18000	2755	150000	1.80			
0.64	14600	2182	150000	2.2			
0.82	11300	1704	150000	2.8	K	167/RF97	WSS1.1KW-4
0.99	9330	1408	150000	3.4			
1.1	8560	1296	150000	3.7			

Output speed n_a [r/min] Скорость на выходном валу па [об/мин]	Output torque M_a [N • m] Крутящий момент на выходе Ма [Нм]	Ratio i Передаточное число i	Permitted overhung load F_{Ra} [N] Допустимая внешняя радиальная нагрузка FRa [Н]	Service factor f_B Сервис-фактор fB	Model Модель		
1.1kW							
0.40	22900	3516	109300	0.80	K	157/RF97	WSS1.1KW-4
0.46	20100	3051	111100	0.90	KF	157/RF97	WSS1.1KW-4
0.54	16900	2610	112700	1.05	KA	157/RF97	WSS1.1KW-4
0.60	15100	2322	113500	1.20	KAF	157/RF97	WSS1.1KW-4
0.84	11000	1659	115000	1.65			
1.0	8970	1365	115600	2.0	K	157/RF97	WSS1.1KW-4
1.1	8030	1229	115800	2.2	KF	157/RF97	WSS1.1KW-4
1.3	7150	1093	116000	2.5	KA	157/RF97	WSS1.1KW-4
1.5	6160	942	116100	2.9	KAF	157/RF97	WSS1.1KW-4
1.6	5550	854	116200	3.2			
0.73	13100	1926	79100	1.00			
0.80	11900	1757	79800	1.10			
0.91	10400	1541	80500	1.25			
1.0	9100	1342	81100	1.45			
1.2	7960	1177	81500	1.65	K	127/RF77	WSS1.1KW-4
1.4	6950	1025	81800	1.85	KF	127/RF77	WSS1.1KW-4
1.6	6080	899	82000	2.1	KA	127/RF77	WSS1.1KW-4
1.8	5270	790	82200	2.5	KAF	127/RF77	WSS1.1KW-4
2.0	4740	704	82400	2.7			
2.3	4090	610	82500	3.2			
2.5	3690	549	82500	3.5			
2.9	3180	477	82600	4.1			
1.2	7920	1166	65000	1.00			
1.4	6920	1030	65000	1.15			
1.5	6050	904	65000	1.30			
1.8	5380	793	65000	1.50	K	107/RF77	WSS1.1KW-4
2.0	4700	696	65000	1.70	KF	107/RF77	WSS1.1KW-4
2.3	4120	615	65000	1.95	KA	107/RF77	WSS1.1KW-4
2.7	3500	522	65000	2.3	KAF	107/RF77	WSS1.1KW-4
3.0	3080	461	65000	2.6			
3.4	2720	408	65000	2.9			
3.8	2450	364	65000	3.3			
4.4	2140	318	65000	3.7			
1.9	5030	743	39900	0.85			
2.2	4420	652	40000	0.95			
2.4	3910	573	40000	1.10	K	97/RF57	WSS1.1KW-4
2.8	3400	504	40000	1.25	KF	97/RF57	WSS1.1KW-4
3.2	2940	437	40000	1.45	KA	97/RF57	WSS1.1KW-4
3.7	2590	382	40000	1.65	KAF	97/RF57	WSS1.1KW-4
4.1	2300	342	40000	1.85			
3.0	3220	474	26600	0.85			
3.3	2890	426	27000	0.95			
3.8	2520	373	27500	1.05	K	87/RF57	WSS1.1KW-4
4.2	2230	330	27800	1.20	KF	87/RF57	WSS1.1KW-4
4.8	1980	294	28100	1.35	KA	87/RF57	WSS1.1KW-4
5.6	1700	250	28300	1.60	KAF	87/RF57	WSS1.1KW-4
5.9	1600	236	28400	1.70			
7.0	1360	201	28600	2.0			
3.9	2720	176.05	40000	1.60	K	97	WSS1.1KW-8
4.4	2370	153.21	40000	1.80	KF	97	WSS1.1KW-8
4.8	2170	140.28	40000	2.0	KA	97	WSS1.1KW-8
5.5	1910	123.93	40000	2.2	KAF	97	WSS1.1KW-8
5.2	2010	176.05	40000	2.1	K	97	WSS1.1KW-6
6.0	1750	153.21	40000	2.5	KF	97	WSS1.1KW-6
6.6	1600	140.28	40000	2.7	KA	97	WSS1.1KW-6
7.4	1420	123.93	40000	3.0	KAF	97	WSS1.1KW-6
7.9	1320	176.05	40000	3.3	K	97	WSS1.1KW-4
9.1	1150	153.21	40000	3.7	KF	97	WSS1.1KW-4
10	1050	140.28	40000	4.1	KA	97	WSS1.1KW-4
					KAF	97	WSS1.1KW-4

Output speed n_a [r/min] Скорость на выходном валу па [об/мин]	Output torque M_a [N • m] Крутящий момент на выходе Ма [Нм]	Ratio i Передаточное число i	Permitted overhung load F_{Ra} [N] Допустимая внешняя радиальная нагрузка FRa [Н]	Service factor f_B Сервис-фактор fB	Model Модель		
1.1kW							
5.3	1990	174.19	28100	1.35	K	87	WSS1.1KW-6
5.6	1880	164.34	28200	1.45	KF	87	WSS1.1KW-6
6.2	1680	147.32	28300	1.60	KA	87	WSS1.1KW-6
7.2	1450	126.91	28500	1.85	KAF	87	WSS1.1KW-6
8.0	1310	174.19	28600	2.1			
8.5	1230	164.34	28700	2.2	K	87	WSS1.1KW-4
9.5	1110	147.32	28700	2.4	KF	87	WSS1.1KW-4
11	950	126.91	28800	2.8	KA	87	WSS1.1KW-4
12	870	115.82	28800	3.1	KAF	87	WSS1.1KW-4
6.8	1540	135.28	15400	1.00	K	77	WSS1.1KW-6
7.2	1470	128.52	15900	1.05	KF	77	WSS1.1KW-6
8.1	1300	113.56	17000	1.20	KA	77	WSS1.1KW-6
9.5	1110	97.05	17900	1.40	KAF	77	WSS1.1KW-6
10	1020	135.28	18300	1.55	K	77	WSS1.1KW-4
11	960	128.52	18400	1.60	KF	77	WSS1.1KW-4
12	850	113.56	18800	1.80	KA	77	WSS1.1KW-4
					KAF	77	WSS1.1KW-4
14	730	97.05	19200	2.1	K	77	WSS1.1KW-4
16	670	88.97	19300	2.3	KF	77	WSS1.1KW-4
18	585	78.07	19500	2.7	KA	77	WSS1.1KW-4
19	555	73.99	19600	2.8	KAF	77	WSS1.1KW-4
13	810	108.03	10400	1.00	K	67	WSS1.1KW-4
14	770	102.62	10700	1.05	KF	67	WSS1.1KW-4
16	675	90.04	11400	1.20	KA	67	WSS1.1KW-4
18	575	76.37	12000	1.45	KAF	67	WSS1.1KW-4
20	515	68.95	12300	1.60			
23	455	60.66	12600	1.80	K	67	WSS1.1KW-4
24	430	57.28	12700	1.90	KF	67	WSS1.1KW-4
29	365	48.77	12900	2.2	KA	67	WSS1.1KW-4
32	335	44.32	13000	2.5	KAF	67	WSS1.1KW-4
36	290	38.39	13000	2.8			
16	675	90.26	2410	0.90			
18	575	76.56	7840	1.05			
20	520	69.12	8280	1.15			
23	455	60.81	8630	1.30			
24	430	57.42	8750	1.40	K	57	WSS1.1KW-4
29	365	48.89	9020	1.65	KF	57	WSS1.1KW-4
32	335	44.43	9160	1.80	KA	57	WSS1.1KW-4
36	290	38.49	9330	2.1	KAF	57	WSS1.1KW-4
39	270	35.70	9400	2.2			
46	225	30.28	9540	2.6			
51	205	27.34	9510	2.9			
58	181	24.05	9220	3.3			
62	170	22.71	9090	3.5			
72	145	19.34	8720	4.0			
80	132	17.57	8510	4.2			
92	114	15.22	8180	4.7	K	57	WSS1.1KW-4
106	99	13.25	7880	5.1	KF	57	WSS1.1KW-4
117	90	11.92	7570	4.6	KA	57	WSS1.1KW-4
124	85	11.26	7450	4.9	KAF	57	WSS1.1KW-4
146	72	9.59	7120	5.6			
161	65	8.71	6930	6.0			
186	57	7.55	6650	6.4			
213	49	6.57	6380	7.0			
25	425	56.83	3310	0.95	K	47	WSS1.1KW-4
29	365	48.95	6360	1.10	KF	47	WSS1.1KW-4
30	345	46.03	6610	1.15	KA	47	WSS1.1KW-4
					KAF	47	WSS1.1KW-4
35	295	39.61	7090	1.35			
40	265	35.39	7090	1.50			
45	235	31.30	6960	1.70	K	47	WSS1.1KW-4
48	220	29.32	6890	1.80	KF	47	WSS1.1KW-4
54	194	25.91	6730	2.1	KA	47	WSS1.1KW-4
64	164	21.81	6510	2.4	KAF	47	WSS1.1KW-4
72	147	19.58	6360	2.7			

Output speed n_a [r/min] Скорость на выходном валу па [об/мин]	Output torque M_a [N • m] Крутящий момент на выходе Ма [Нм]	Ratio i Передаточное число i	Permitted overhung load F_{Ra} [N] Допустимая внешняя радиальная нагрузка FRa [Н]	Service factor f_B Сервис-фактор fB	Model Модель		
1.1kW							
47	225	29.96	3420	0.90			
56	188	24.99	3440	1.05			
60	175	23.36	3440	1.10			
69	152	20.19	3420	1.20			
82	129	17.15	3370	1.40			
91	115	15.31	3330	1.50	K	37	WSS1.1KW-4
107	98	13.08	3260	1.70	KF	37	WSS1.1KW-4
115	91	12.14	3220	1.75	KA	37	WSS1.1KW-4
133	79	10.49	3140	2.0	KAF	37	WSS1.1KW-4
157	67	8.91	3040	2.4			
176	60	7.96	2970	2.6			
206	51	6.80	2870	2.9			
220	48	6.37	2830	3.0			
261	40	5.36	2720	3.5			
1.5kW							
0.21	60700	6747	171100	0.80			
0.24	53700	5991	183600	0.95			
0.26	47900	5358	190000	1.05	K	187/RF97	WSS1.5KW-8
0.29	42900	4817	190000	1.15			
0.32	38900	4370	190000	1.30			
0.39	33000	3609	190000	1.50			
0.46	27800	3062	190000	1.80	K	187/RF97	WSS1.5KW-8
0.56	22800	2519	190000	2.2			
0.62	20400	2268	190000	2.5			
0.35	36700	4079	150000	0.85			
0.42	30400	3376	150000	1.05	K	167/RF97	WSS1.5KW-8
0.51	24700	2755	150000	1.30			
0.65	19900	2182	150000	1.60			
0.83	15500	1704	150000	2.1	K	167/RF97	WSS1.5KW-8
1.0	12800	1408	150000	2.5			
1.1	11800	1296	150000	2.7			
0.61	20700	2322	150000	1.85	K	157/RF97	WSS1.5KW-4
					KF	157/RF97	WSS1.5KW-4
					KA	157/RF97	WSS1.5KW-4
					KAF	157/RF97	WSS1.5KW-4
0.85	15100	1659	113500	1.20			
1.0	12300	1365	114600	1.45			
1.1	11100	1229	115000	1.65			
1.3	9840	1093	115300	1.85	K	157/RF97	WSS1.5KW-4
1.5	8480	942	115700	2.1	KF	157/RF97	WSS1.5KW-4
1.6	7650	854	115900	2.3	KA	157/RF97	WSS1.5KW-4
2.5	5050	567	116300	3.6	KAF	157/RF97	WSS1.5KW-4
2.8	4490	504	116400	4.0			
2.6	4820	536	82300	2.7	K	127/RF87	WSS1.5KW-4
3.4	3770	418	82500	3.5	KF	127/RF87	WSS1.5KW-4
3.8	3330	367	82600	3.9	KA	127/RF87	WSS1.5KW-4
					KAF	127/RF87	WSS1.5KW-4
0.80	16200	1757	73400	0.80			
0.91	14200	1541	77500	0.90			
1.0	12400	1342	79500	1.05			
1.2	10900	1177	80300	1.20			
1.4	9470	1025	80900	1.35	K	127/RF77	WSS1.5KW-4
1.6	8300	899	81400	1.55	KF	127/RF77	WSS1.5KW-4
1.8	7210	790	81700	1.80	KA	127/RF77	WSS1.5KW-4
2.0	6480	704	81900	2.0	KAF	127/RF77	WSS1.5KW-4
2.3	5590	610	82200	2.3			
2.6	5040	549	82300	2.6			
3.0	4360	477	82400	3.0			
3.4	3840	418	82500	3.4			

Output speed n_a [r/min] Скорость на выходном валу па [об/мин]	Output torque M_a [N・m] Крутящий момент на выходе Ма [Нм]	Ratio i Передат очное число i	Permitted overhung load F_{Ra} [N] Допустимая внешняя радиальная нагрузка FRa [Н]	Service factor f_B Сервис-фактор fB	Model Модель
1.5kW					
1.4	9460	1030	65000	0.80	
1.6	8280	904	65000	0.95	
1.8	7330	793	65000	1.10	
2.0	6420	696	65000	1.25	K 107/RF77WSS1.5KW-4
2.3	5640	615	65000	1.40	KF 107/RF77WSS1.5KW-4
2.7	4780	522	65000	1.65	KA 107/RF77WSS1.5KW-4
3.1	4210	461	65000	1.90	KAF107/RF77WSS1.5KW-4
3.5	3720	408	65000	2.2	
3.9	3350	364	65000	2.4	
4.4	2920	318	65000	2.7	
2.5	5320	573	39500	0.80	
2.8	4650	504	40000	0.95	
3.2	4020	437	40000	1.05	K 97/RF57WSS1.5KW-4
3.7	3540	382	40000	1.20	KF 97/RF57WSS1.5KW-4
4.1	3140	342	40000	1.35	KA 97/RF57WSS1.5KW-4
4.6	2820	305	40000	1.50	KAF 97/RF57WSS1.5KW-4
5.5	2380	258	40000	1.80	
6.1	2140	232	40000	2.0	
7.1	1840	199	40000	2.3	
4.3	3040	330	26800	0.90	
4.8	2700	294	27300	1.00	K 87/RF57WSS1.5KW-4
5.6	2310	250	27700	1.15	KF 87/RF57WSS1.5KW-4
6.0	2180	236	27900	1.25	KA 87/RF57WSS1.5KW-4
7.0	1860	201	28200	1.45	KAF 87/RF57WSS1.5KW-4
7.7	1690	183	28300	1.60	
4.9	2940	143.47	65000	2.7	K 107 WSS1.5KW-8
5.8	2490	121.46	65000	3.2	KF 107 WSS1.5KW-8
6.2	2300	112.41	65000	3.5	KA 107 WSS1.5KW-8
					KAF 107 WSS1.5KW-8
4.6	3140	153.21	40000	1.35	K 97 WSS1.5KW-8
5.0	2870	140.28	40000	1.50	KF 97 WSS1.5KW-8
5.7	2540	123.93	40000	1.70	KA 97 WSS1.5KW-8
					KAF 97 WSS1.5KW-8
5.2	2740	176.05	40000	1.55	K 97 WSS1.5KW-6
6.0	2390	153.21	40000	1.80	KF 97 WSS1.5KW-6
6.6	2180	140.28	40000	1.95	KA 97 WSS1.5KW-6
7.4	1930	123.93	40000	2.2	KAF 97 WSS1.5KW-6
8.0	1790	176.05	40000	2.4	K 97 WSS1.5KW-4
9.2	1560	153.21	40000	2.8	KF 97 WSS1.5KW-4
10	1430	140.28	40000	3.0	KA 97 WSS1.5KW-4
11	1260	123.93	40000	3.4	KAF 97 WSS1.5KW-4
6.2	2290	147.32	27800	1.20	K 87 WSS1.5KW-6
7.2	1980	126.91	28100	1.35	KF 87 WSS1.5KW-6
7.9	1800	115.82	28200	1.50	KA 87 WSS1.5KW-6
9.0	1600	102.71	28400	1.70	KAF 87 WSS1.5KW-6
8.1	1770	174.19	28300	1.55	
8.6	1670	164.34	28300	1.60	
9.6	1500	147.32	28500	1.80	K 87 WSS1.5KW-4
11	1290	126.91	28600	2.1	KF 87 WSS1.5KW-4
12	1180	115.82	28700	2.3	KA 87 WSS1.5KW-4
14	1040	102.71	28800	2.6	KAF 87 WSS1.5KW-4
16	880	86.34	28800	3.1	
8.1	1770	113.56	13600	0.90	K 77 WSS1.5KW-6
9.5	1510	97.05	15700	1.05	KF 77 WSS1.5KW-6
10	1390	88.97	16400	1.10	KA 77 WSS1.5KW-6
12	1220	78.07	17400	1.30	KAF 77 WSS1.5KW-6
10	1370	135.28	16500	1.15	K 77 WSS1.5KW-4
11	1310	128.52	16900	1.20	KF 77 WSS1.5KW-4
12	1150	113.56	17700	1.35	KA 77 WSS1.5KW-4
15	990	97.05	18400	1.55	KAF 77 WSS1.5KW-4
16	900	88.97	18700	1.70	
18	795	78.07	19000	1.95	
19	750	73.99	19100	2.1	K 77 WSS1.5KW-4
22	660	64.75	19400	2.4	KF 77 WSS1.5KW-4
24	595	58.34	19500	2.6	KA 77 WSS1.5KW-4
28	520	51.18	19700	3.0	KAF 77 WSS1.5KW-4
31	460	45.16	19800	3.4	
35	405	40.04	19800	3.8	

Output speed n_a [r/min] Скорость на выходном валу па [об/мин]	Output torque M_a [N・m] Крутящий момент на выходе Ма [Нм]	Ratio i Передат очное число i	Permitted overhung load F_{Ra} [N] Допустимая внешняя радиальная нагрузка FRa [Н]	Service factor f_B Сервис-фактор fB	Model Модель
1.5kW					
16	910	90.04	9370	0.90	K 67 WSS1.5KW-4
18	775	76.37	10700	1.05	KF 67 WSS1.5KW-4
20	700	68.95	11300	1.15	KA 67 WSS1.5KW-4
23	615	60.66	11800	1.35	KAF 67 WSS1.5KW-4
25	580	57.28	12000	1.40	
29	495	48.77	12400	1.65	
32	450	44.32	12600	1.80	K 67 WSS1.5KW-4
37	390	38.39	12800	2.0	KF 67 WSS1.5KW-4
40	360	35.62	12900	2.3	KA 67 WSS1.5KW-4
47	305	30.22	13000	2.7	KAF 67 WSS1.5KW-4
52	275	27.28	13000	3.0	
59	245	24.00	13000	3.3	
23	620	60.81	7480	0.95	K 57 WSS1.5KW-4
25	685	57.42	7770	1.05	KF 57 WSS1.5KW-4
29	495	48.89	8430	1.20	KA 57 WSS1.5KW-4
32	450	44.43	8650	1.35	KAF 57 WSS1.5KW-4
37	390	38.49	8920	1.55	
39	365	35.70	9040	1.65	K 57 WSS1.5KW-4
47	310	30.28	9190	1.95	KF 57 WSS1.5KW-4
52	280	27.34	9010	2.2	KA 57 WSS1.5KW-4
59	245	24.05	8780	2.5	KAF 57 WSS1.5KW-4
62	230	22.71	8670	2.6	
73	196	19.34	8360	2.9	
					K 47 WSS1.5KW-4
36	400	39.61	5890	1.00	KF 47 WSS1.5KW-4
40	360	35.39	6360	1.10	KA 47 WSS1.5KW-4
45	320	31.30	6310	1.25	KAF 47 WSS1.5KW-4
48	300	29.32	6270	1.35	
54	265	25.91	6190	1.50	K 47 WSS1.5KW-4
65	220	21.81	6050	1.80	KF 47 WSS1.5KW-4
72	199	19.58	5950	2.0	KA 47 WSS1.5KW-4
84	171	16.86	5800	2.2	KAF 47 WSS1.5KW-4
89	161	15.86	5730	2.4	
103	139	13.65	5560	2.6	
116	124	12.19	5430	2.8	
120	120	11.17	5340	2.3	
60	235	23.36	2860	0.80	
70	205	20.19	2920	0.90	
82	174	17.15	2940	1.05	
92	156	15.31	2950	1.10	K 37 WSS1.5KW-4
108	133	13.08	2930	1.25	KF 37 WSS1.5KW-4
116	123	12.14	2920	1.30	KA 37 WSS1.5KW-4
134	107	10.49	2880	1.50	KAF 37 WSS1.5KW-4
158	91	8.91	2820	1.75	
177	81	7.96	2770	1.90	
207	69	6.80	2700	2.2	
221	65	6.37	2670	2.2	
263	55	5.36	2580	2.6	
2.2kW					
0.32	57900	4370	176200	0.85	K 187/RF97 WSS2.2KW-4
0.50	37000	2818	190000	1.35	
0.39	48800	3609	190000	1.00	
0.46	41300	3062	190000	1.20	
0.56	33800	2519	190000	1.50	
0.62	30400	2268	190000	1.65	K 187/RF97 WSS2.2KW-4
0.69	27400	2054	190000	1.80	
0.77	24200	1821	190000	2.1	
0.88	21400	1605	190000	2.3	
0.51	36600	2755	150000	0.85	K 167/RF97 WSS2.2KW-4
0.62	29800	2263	150000	1.05	
0.65	29500	2182	150000	1.10	
0.83	22900	1704	150000	1.40	
1.0	19000	1408	150000	1.70	K 167/RF97 WSS2.2KW-4
1.1	17400	1296	150000	1.85	
1.3	14700	1101	150000	2.2	
1.5	12600	944	150000	2.5	

Output speed n_a [r/min] Скорость на выходном валу па [об/мин]	Output torque M_a [N・m] Крутящий момент на выходе Ма [Нм]	Ratio i Передат очное число i	Permitted overhung load F_{Ra} [N] Допустимая внешняя радиальная нагрузка FRa [Н]	Service factor f_B Сервис-фактор fB	Model Модель
2.2kW					
0.85	22400	1659	109700	0.80	
1.0	18300	1365	112000	1.00	
1.1	16500	1229	112900	1.10	K 157/RF97WSS2.2KW-4
1.3	14600	1093	113700	1.25	KF 157/RF97WSS2.2KW-4
1.5	12600	942	114500	1.45	KA 157/RF97WSS2.2KW-4
1.6	11400	854	114900	1.60	KAF157/RF97WSS2.2KW-4
1.9	9990	756	115300	1.80	
2.6	7180	536	81700	1.80	K 127/RF87WSS2.2KW-4
3.0	6310	473	82000	2.1	KF 127/RF87WSS2.2KW-4
3.4	5600	418	82200	2.3	KA 127/RF87WSS2.2KW-4
3.8	4950	367	82300	2.6	KAF127/RF87WSS2.2KW-4
4.3	4440	330	82400	2.9	
1.4	14000	1025	78000	0.95	
1.6	12200	899	79600	1.05	
1.8	10700	790	80400	1.20	K 127/RF77WSS2.2KW-4
2.0	9580	704	80900	1.35	KF 127/RF77WSS2.2KW-4
2.3	8280	610	81400	1.55	KA 127/RF77WSS2.2KW-4
2.6	7460	549	81600	1.75	KAF127/RF77WSS2.2KW-4
3.0	6430	477	81900	2.0	
3.4	5680	418	82100	2.3	
2.3	8340	615	65000	0.95	
2.7	7070	522	65000	1.15	
3.1	6230	461	65000	1.30	K 107/RF77WSS2.2KW-4
3.5	5520	408	65000	1.45	KF 107/RF77WSS2.2KW-4
3.9	4940	364	65000	1.60	KA 107/RF77WSS2.2KW-4
4.4	4320	318	65000	1.85	KAF107/RF77WSS2.2KW-4
4.9	3890	286	65000	2.1	
5.6	3410	251	65000	2.3	
3.7	5210	382	39700	0.80	
4.1	4640	342	40000	0.95	K 97/RF57WSS2.2KW-4
4.6	4170	305	40000	1.05	KF 97/RF57WSS2.2KW-4
5.5	3510	258	40000	1.20	KA 97/RF57WSS2.2KW-4
6.1	3160	232	40000	1.35	KAF 97/RF57WSS2.2KW-4
7.1	2710	199	40000	1.60	
4.9	4310	143.47	65000	1.85	K 107 WSS2.2KW-8
5.8	3650	121.46	65000	2.2	KF 107 WSS2.2KW-8
6.2	3370	112.41	65000	2.4	KA 107 WSS2.2KW-8
6.9	3020	100.75	65000	2.7	KAF 107 WSS2.2KW-8
6.1	3420	153.21	40000	1.25	K 97 WSS2.2KW-6
6.7	3140	140.28	40000	1.35	KF 97 WSS2.2KW-6
7.6	2770	123.93	40000	1.55	KA 97 WSS2.2KW-6
8.9	2350	105.13	40000	1.85	KAF 97 WSS2.2KW-6
8.0	2620	176.05	40000	1.65	K 97 WSS2.2KW-4
9.2	2280	153.21	40000	1.90	KF 97 WSS2.2KW-4
10	2090	140.28	40000	2.1	KA 97 WSS2.2KW-4
11	1850	123.93	40000	2.3	KAF 97 WSS2.2KW-4
13	1570	105.13	40000	2.8	K 97 WSS2.2KW-4
15	1440	96.80	40000	3.0	KF 97 WSS2.2KW-4
					KA 97 WSS2.2KW-4
					KAF 97 WSS2.2KW-4
9.6	2200	147.32	27900	1.25	K 87 WSS2.2KW-4
11	1890	126.91	28200	1.45	KF 87 WSS2.2KW-4
12	1730	115.82	28300	1.55	KA 87 WSS2.2KW-4
					KAF 87 WSS2.2KW-4
14	1530	102.71	28500	1.75	K 87 WSS2.2KW-4
16	1290	86.34	28600	2.1	KF 87 WSS2.2KW-4
18	1180	79.34	28700	2.3	KA 87 WSS2.2KW-4
20	1050	70.46	28800	2.6	KAF 87 WSS2.2KW-4
22	940	63.00	28800	2.9	
12	1690	113.56	14300	0.90	
15	1450	97.05	16100	1.05	K 77 WSS2.2KW-4
16	1330	88.97	16800	1.15	KF 77 WSS2.2KW-4
18	1160	78.07	17600	1.35	KA 77 WSS2.2KW-4
19	1100	73.99	17900	1.40	KAF 77 WSS2.2KW-4
22	960	64.75	18400	1.60	

Output speed n_a [r/min] Скорость на выходном валу па [об/мин]	Output torque M_a [N・m] Крутящий момент на выходе Ма [Нм]	Ratio i Передат очное число i	Permitted overhung load F_{Ra} [N] Допустимая внешняя радиальная нагрузка FRa [Н]	Service factor f_B Сервис-фактор fB	Model Модель
2.2kW					
24	870	58.34	18800	1.80	
28	765	51.18	19100	2.0	
31	675	45.16	19300	2.3	K 77 WSS2.2KW-4
35	595	40.04	19500	2.6	KF 77 WSS2.2KW-4
40	525	35.20	19700	3.0	KA 77 WSS2.2KW-4
46	460	30.89	19800	3.4	KAF 77 WSS2.2KW-4
48	435	29.27	19800	3.6	
55	380	25.62	19900	4.1	
23	900	60.66	9490	0.90	
25	850	57.28	10000	0.95	K 67 WSS2.2KW-4
29	725	48.77	11100	1.15	KF 67 WSS2.2KW-4
32	660	44.32	11500	1.25	KA 67 WSS2.2KW-4
37	570	38.39	12100	1.40	KAF 67 WSS2.2KW-4
40	530	35.62	12300	1.55	
47	450	30.22	12600	1.80	
52	405	27.28	12800	2.0	
59	360	24.00	13000	2.2	
62	340	22.66	13000	2.3	
73	285	19.30	13000	2.6	
80	260	17.54	13000	2.8	K 67 WSS2.2KW-4
93	225	15.19	13000	3.1	KF 67 WSS2.2KW-4
107	197	13.22	13000	3.4	KA 67 WSS2.2KW-4
113	186	12.48	13000	2.8	KAF 67 WSS2.2KW-4
133	158	10.63	13000	3.2	
146	144	9.66	13000	3.3	
169	125	8.37	13000	3.5	
194	109	7.28	12700	3.9	
32	660	44.43	5100	0.90	K 57 WSS2.2KW-4
37	575	38.49	7850	1.05	KF 57 WSS2.2KW-4
39	530	35.70	8080	1.15	KA 57 WSS2.2KW-4
47	450	30.28	8250	1.35	KAF 57 WSS2.2KW-4
52	405	27.34	8160	1.45	
59	360	24.05	8030	1.65	
62	340	22.71	7970	1.75	K 57 WSS2.2KW-4
73	290	19.34	7760	2.0	KF 57 WSS2.2KW-4
80	260	17.57	7630	2.1	KA 57 WSS2.2KW-4
93	225	15.22	7430	2.4	KAF 57 WSS2.2KW-4
106	197	13.25	7220	2.6	
118	178	11.92	6890	2.3	
125	168	11.26	6810	2.5	
54	385	25.91	5260	1.05	K 47 WSS2.2KW-4
65	325	21.81	5260	1.25	KF 47 WSS2.2KW-4
72	290	19.58	5240	1.35	KA 47 WSS2.2KW-4
					KAF 47 WSS2.2KW-4
84	250	16.86	5190	1.50	
89	235	15.86	5160	1.60	K 47 WSS2.2KW-4
103	205	13.65	5070	1.75	KF 47 WSS2.2KW-4
116	182	12.19	4990	1.95	KA 47 WSS2.2KW-4
120	175	11.77	4890	1.60	KAF 47 WSS2.2KW-4
133	157	10.56	4810	1.80	
155	136	9.10	4690	2.1	
108	195	13.08	2370	0.85	
134	156	10.49	2430	1.00	K 37 WSS2.2KW-4
158	133	8.91	2440	1.20	KF 37 WSS2.2KW-4
177	119	7.96	2430	1.30	KA 37 WSS2.2KW-4
207	101	6.80	2410	1.50	KAF 37 WSS2.2KW-4
221	95	6.37	2400	1.55	
263	80	5.36	2350	1.75	
3.0kW					
0.50	51300	2818	187700	0.95	K187R97 WSS3.0KW-4
0.46	57100	3062	177600	0.90	
0.56	46800	2519	190000	1.05	
0.62	42100	2268	190000	1.20	
0.68	38000	2054	190000	1.30	K187RF97 WSS3.0KW-4
0.77	33600	1821	190000	1.50	
0.87	29700	1605	190000	1.70	
1.0	25600	1395	190000	1.95	
1.2	22100	1196	190000	2.3	

Output speed n_a [r/min] Скорость на выходном валу na [об/мин]	Output torque M_a [N • m] Крутящий момент на выходе Ma [Нм]	Ratio i Передаточное число i	Permitted overhung load F_{Ra} [N] Допустимая внешняя радиальная нагрузка FRa [Н]	Service factor f_B Сервис-фактор fB	Model Модель
3.0kW					
0.82	31700	1704	150000	1.00	K 167/R97 WSS3.0KW-4
0.99	26200	1408	150000	1.20	
1.1	24100	1296	150000	1.35	
1.3	20300	1101	150000	1.55	
1.5	17500	944	150000	1.85	
1.7	15500	843	150000	2.1	
1.9	14000	757	150000	2.3	
1.1	22800	1229	109400	0.80	K 157/RF97 WSS3.0KW-4
1.3	20300	1093	111000	0.90	KF 157/RF97 WSS3.0KW-4
1.5	17500	942	112400	1.05	KA 157/RF97 WSS3.0KW-4
1.6	15800	854	113200	1.15	KAF 157/RF97 WSS3.0KW-4
1.9	13900	756	114000	1.30	
2.5	10500	567	115200	1.70	
2.8	9310	504	115500	1.95	
2.6	9940	536	80700	1.30	K 127/RF87 WSS3.0KW-4
3.0	8750	473	81200	1.50	KF 127/RF87 WSS3.0KW-4
3.3	7760	418	81500	1.70	KA 127/RF87 WSS3.0KW-4
3.8	6840	367	81800	1.90	KAF 127/RF87 WSS3.0KW-4
4.2	6140	330	82000	2.1	
4.9	5300	287	82200	2.5	
1.8	14800	790	76500	0.90	K 127/RF77 WSS3.0KW-4
2.0	13200	704	79100	1.00	KF 127/RF77 WSS3.0KW-4
2.3	11400	610	80000	1.15	KA 127/RF77 WSS3.0KW-4
2.5	10300	549	80600	1.25	KAF 127/RF77 WSS3.0KW-4
2.9	8920	477	81100	1.45	
3.3	7840	418	81500	1.65	
3.0	8610	461	65000	0.95	K 107/RF77 WSS3.0KW-4
3.4	7620	408	65000	1.05	KF 107/RF77 WSS3.0KW-4
3.8	6820	364	65000	1.15	KA 107/RF77 WSS3.0KW-4
4.4	5960	318	65000	1.35	KAF 107/RF77 WSS3.0KW-4
4.9	5370	286	65000	1.50	
5.6	4700	251	65000	1.70	
6.3	4150	222	65000	1.95	
7.1	3670	196	65000	2.2	
8.1	3250	174	65000	2.2	
9.1	2880	154	65000	2.5	
10	2610	140	65000	2.8	
5.4	4840	258	40000	0.90	K 97/RF57 WSS3.0KW-4
6.0	4360	232	40000	1.00	KF 97/RF57 WSS3.0KW-4
7.0	3740	199	40000	1.15	KA 97/RF57 WSS3.0KW-4
					KAF 97/RF57 WSS3.0KW-4
5.0	5710	143.47	65000	1.40	K 107 WSS3.0KW-8
5.9	4830	121.46	65000	1.65	KF 107 WSS3.0KW-8
6.4	4470	112.41	65000	1.80	KA 107 WSS3.0KW-8
7.2	4010	100.75	65000	2.0	KAF 107 WSS3.0KW-8
7.9	3620	90.96	65000	2.2	
6.6	4370	143.47	65000	1.85	K 107 WSS3.0KW-6
7.7	3700	121.46	65000	2.2	KF 107 WSS3.0KW-6
8.4	3430	112.41	65000	2.3	KA 107 WSS3.0KW-6
9.3	3070	100.75	65000	2.6	KAF 107 WSS3.0KW-6
9.8	2940	143.47	65000	2.7	K 107 WSS3.0KW-4
12	2490	121.46	65000	3.2	KF 107 WSS3.0KW-4
					KA 107 WSS3.0KW-4
					KAF 107 WSS3.0KW-4
7.6	3780	123.93	40000	1.15	K 97 WSS3.0KW-6
8.9	3200	105.13	40000	1.35	KF 97 WSS3.0KW-6
9.7	2950	96.80	40000	1.45	KA 97 WSS3.0KW-6
11	2640	86.52	40000	1.65	KAF 97 WSS3.0KW-6
7.9	3600	176.05	40000	1.20	K 97 WSS3.0KW-4
9.1	3140	153.21	40000	1.35	KF 97 WSS3.0KW-4
10	2870	140.28	40000	1.50	KA 97 WSS3.0KW-4
11	2540	123.93	40000	1.70	KAF 97 WSS3.0KW-4

Output speed n_a [r/min] Скорость на выходном валу na [об/мин]	Output torque M_a [N • m] Крутящий момент на выходе Ma [Нм]	Ratio i Передаточное число i	Permitted overhung load F_{Ra} [N] Допустимая внешняя радиальная нагрузка FRa [Н]	Service factor f_B Сервис-фактор fB	Model Модель
3.0kW					
13	2150	105.13	40000	2.0	K 97 WSS3.0KW-4
14	1980	96.80	40000	2.2	KF 97 WSS3.0KW-4
16	1770	86.52	40000	2.4	KA 97 WSS3.0KW-4
18	1590	77.89	40000	2.7	KAF 97 WSS3.0KW-4
20	1440	70.54	40000	3.0	
22	1280	62.55	40000	3.4	
25	1160	56.55	40000	3.7	
9.5	3010	147.32	26900	0.90	K 87 WSS3.0KW-4
11	2600	126.91	27400	1.05	KF 87 WSS3.0KW-4
12	2370	115.82	27700	1.15	KA 87 WSS3.0KW-4
14	2100	102.71	28000	1.30	KAF 87 WSS3.0KW-4
16	1770	86.34	28300	1.55	
18	1620	79.34	28400	1.65	
20	1440	70.46	28500	1.85	K 87 WSS3.0KW-4
22	1290	63.00	28600	2.1	KF 87 WSS3.0KW-4
25	1160	56.64	28700	2.3	KA 87 WSS3.0KW-4
28	1010	49.16	28800	2.7	KAF 87 WSS3.0KW-4
32	900	44.02	28800	2.9	
38	745	36.52	28400	3.3	
16	1820	88.97	13100	0.85	
18	1600	78.07	15000	0.95	K 77 WSS3.0KW-4
19	1510	73.99	15600	1.00	KF 77 WSS3.0KW-4
22	1330	64.75	16800	1.15	KA 77 WSS3.0KW-4
24	1190	58.34	17500	1.30	KAF 77 WSS3.0KW-4
27	1050	51.18	18100	1.50	
31	920	45.16	18600	1.70	K 77 WSS3.0KW-4
35	820	40.04	18900	1.90	KF 77 WSS3.0KW-4
40	720	35.20	19200	2.2	KA 77 WSS3.0KW-4
45	630	30.89	19400	2.5	KAF 77 WSS3.0KW-4
32	910	44.32	9450	0.90	
36	785	38.39	10600	1.00	K 67 WSS3.0KW-4
39	730	35.62	11100	1.15	KF 67 WSS3.0KW-4
46	620	30.22	11800	1.35	KA 67 WSS3.0KW-4
51	560	27.28	12100	1.45	KAF 67 WSS3.0KW-4
58	490	24.00	12500	1.65	
62	465	22.66	12600	1.70	
73	395	19.30	12800	1.95	
80	360	17.54	13000	2.1	K 67 WSS3.0KW-4
92	310	15.19	13000	2.2	KF 67 WSS3.0KW-4
106	270	13.22	13000	2.5	KA 67 WSS3.0KW-4
112	255	12.48	13000	2.1	KAF 67 WSS3.0KW-4
132	220	10.63	13000	2.3	
145	198	9.66	13000	2.4	
46	620	30.28	7180	0.95	K 57 WSS3.0KW-4
51	560	27.34	7190	1.05	KF 57 WSS3.0KW-4
58	490	24.05	7180	1.20	KA 57 WSS3.0KW-4
					KAF 57 WSS3.0KW-4
62	465	22.71	7160	1.30	
72	395	19.34	7080	1.45	
80	360	17.57	7020	1.55	
92	310	15.22	6890	1.70	
106	270	13.25	6750	1.90	K 57 WSS3.0KW-4
117	245	11.92	6420	1.70	KF 57 WSS3.0KW-4
124	230	11.26	6370	1.80	KA 57 WSS3.0KW-4
146	196	9.59	6200	2.1	KAF 57 WSS3.0KW-4
161	178	8.71	6090	2.2	
186	154	7.55	5920	2.4	
213	134	6.57	5750	2.6	
72	400	19.58	4430	1.00	K 47 WSS3.0KW-4
83	345	16.86	4490	1.10	KF 47 WSS3.0KW-4
88	325	15.86	4500	1.15	KA 47 WSS3.0KW-4
					KAF 47 WSS3.0KW-4

Цилиндро-конические мотор-редукторы серии K/ K Helical-Bevel Geared Motor K
Committed to building a world-class electromechanical brand
СОЗДАЕМ ЭЛЕКТРОМЕХАНИЧЕСКИЙ БРЕНД МИРОВОГО КЛАССА

Output speed n_a [r/min] Скорость на выходном валу na [об/мин]	Output torque M_a [N • m] Крутящий момент на выходе Ma [Нм]	Ratio i Передаточное число i	Permitted overhung load F_{Ra} [N] Допустимая внешняя радиальная нагрузка FRa [Н]	Service factor f_B Сервис-фактор fB	Model Модель
3.0kW					
103	280	13.65	4510	1.30	K 47 WSS3.0KW-4
115	250	12.19	4490	1.40	KF 47 WSS3.0KW-4
119	240	11.77	4370	1.15	KA 47 WSS3.0KW-4
133	215	10.56	4350	1.30	KAF 47 WSS3.0KW-4
154	186	9.10	4290	1.50	
164	175	8.56	4270	1.55	
190	151	7.36	4190	1.65	
213	135	6.58	4120	1.80	
241	119	5.81	4030	1.95	
157	182	8.91	2000	0.90	K 37 WSS3.0KW-4
176	163	7.96	2040	0.95	KF 37 WSS3.0KW-4
206	139	6.80	2080	1.10	KA 37 WSS3.0KW-4
220	130	6.37	2080	1.10	KAF 37 WSS3.0KW-4
261	110	5.36	2090	1.30	
4.0kW					
1.7	20300	835	190000	2.5	K 187/RF107 WSS4.0KW-4
2.7	12600	520	190000	4.0	
0.56	61900	2519	168800	0.80	
0.63	55600	2268	180200	0.90	
0.69	50300	2054	189400	1.00	
0.78	44500	1821	190000	1.10	
0.88	39300	1605	190000	1.25	K 187/RF97 WSS4.0KW-4
1.0	34000	1395	190000	1.45	
1.2	29200	1196	190000	1.70	
1.4	25600	1046	190000	1.95	
1.5	23100	945	190000	2.2	
1.0	34600	1408	150000	0.90	
1.1	31900	1296	150000	1.00	
1.3	26900	1101	150000	1.20	
1.5	23100	944	150000	1.40	
1.7	20500	843	150000	1.55	K 167/RF97 WSS4.0KW-4
1.9	18500	757	150000	1.75	
2.2	15400	632	150000	2.1	
1.7	20900	854	110600	0.85	K 157/RF97 WSS4.0KW-4
1.9	18400	756	112000	1.00	KF 157/RF97 WSS4.0KW-4
2.5	13800	567	114000	1.30	KA 157/RF97 WSS4.0KW-4
2.8	12300	504	114600	1.45	KAF 157/RF97 WSS4.0KW-4
3.3	10600	434	115100	1.70	
2.7	13100	536	79100	1.00	
3.0	11600	473	79900	1.10	
3.4	10300	418	80600	1.25	K 127/RF87 WSS4.0KW-4
3.9	9040	367	81100	1.45	KF 127/RF87 WSS4.0KW-4
4.3	8120	330	81400	1.60	KA 127/RF87 WSS4.0KW-4
5.0	7010	287	81800	1.85	KAF 127/RF87 WSS4.0KW-4
5.6	6200	253	82000	2.1	
2.3	15100	610	75800	0.85	K 127/RF77 WSS4.0KW-4
2.6	13600	549	78800	0.95	KF 127/RF77 WSS4.0KW-4
3.0	11800	477	79800	1.10	KA 127/RF77 WSS4.0KW-4
3.4	10300	418	80500	1.25	KAF 127/RF77 WSS4.0KW-4
3.9	8990	364	650000	0.90	
4.5	7860	318	650000	1.00	
5.0	7080	286	650000	1.15	K 107/RF77 WSS4.0KW-4
5.7	6200	251	650000	1.30	KF 107/RF77 WSS4.0KW-4
6.4	5470	222	650000	1.45	KA 107/RF77 WSS4.0KW-4
7.2	4840	196	650000	1.65	KAF 107/RF77 WSS4.0KW-4
8.2	4290	174	650000	1.70	
9.2	3800	154	650000	1.90	
10	3440	140	650000	2.1	
7.1	4930	199	40000	0.85	K 97/RF57 WSS4.0KW-4
					KF 97/RF57 WSS4.0KW-4
					KA 97/RF57 WSS4.0KW-4
					KAF 97/RF57 WSS4.0KW-4
5.3	7220	136.14	81700	1.80	K 127 WSS4.0KW-8
5.9	6500	122.48	81900	2.0	KF 127 WSS4.0KW-8
6.5	5850	110.18	82100	2.2	KA 127 WSS4.0KW-8
					KAF 127 WSS4.0KW-8

Output speed n_a [r/min] Скорость на выходном валу na [об/мин]	Output torque M_a [N • m] Крутящий момент на выходе Ma [Нм]	Ratio i Передаточное число i	Permitted overhung load F_{Ra} [N] Допустимая внешняя радиальная нагрузка FRa [Н]	Service factor f_B Сервис-фактор fB	Model Модель
4.0kW					
6.6	5810	146.07	82100	2.2	K 127 WSS4.0KW-8
7.1	5420	136.14	82200	2.4	KF 127 WSS4.0KW-8
7.8	4870	122.48	82300	2.7	KA 127 WSS4.0KW-8
8.7	4380	110.18	82400	3.0	KAF 127 WSS4.0KW-8
6.4	5960	112.41	65000	1.35	K 107 WSS4.0KW-8
7.2	5340	100.75	65000	1.50	KF 107 WSS4.0KW-8
7.9	4830	90.96	65000	1.65	KA 107 WSS4.0KW-8
8.7	4380	82.61	65000	1.85	KAF 107 WSS4.0KW-8
6.7	5710	143.47	65000	1.40	K 107 WSS4.0KW-6
7.9	4830	121.46	65000	1.65	KF 107 WSS4.0KW-6
8.5	4470	112.41	65000	1.80	KA 107 WSS4.0KW-6
9.5	4010	100.75	65000	2.0	KAF 107 WSS4.0KW-6
11	3620	90.96	65000	2.2	
9.9	3860	143.47	65000	2.1	
12	3270	121.46	65000	2.5	K 107 WSS4.0KW-4
13	3020	112.41	65000	2.7	KF 107 WSS4.0KW-4
14	2710	100.75	65000	3.0	KA 107 WSS4.0KW-4
16	2450	90.96	65000	3.3	KAF 107 WSS4.0KW-4
17	2220	82.61	65000	3.6	
19	1970	73.30	65000	4.1	
9.3	4120	153.21	40000	1.05	K 97 WSS4.0KW-4
10	3770	140.28	40000	1.15	KF 97 WSS4.0KW-4
11	3330	123.93	40000	1.30	KA 97 WSS4.0KW-4
					KAF 97 WSS4.0KW-4
14	2830	105.13	40000	1.50	K 97 WSS4.0KW-4
15	2600	96.80	40000	1.65	KF 97 WSS4.0KW-4
16	2330	86.52	40000	1.85	KA 97 WSS4.0KW-4
18	2100	77.89	40000	2.0	KAF 97 WSS4.0KW-4
20	1900	70.54	40000	2.3	
12	3120	115.82	26700	0.85	K 87 WSS4.0KW-4
14	2760	102.71	27200	1.00	KF 87 WSS4.0KW-4
16	2320	86.34	27700	1.15	KA 87 WSS4.0KW-4
18	2130	79.34	27900	1.25	KAF 87 WSS4.0KW-4
20	1900	70.46	28200	1.40	
23	1690	63.00	28300	1.60	K 87 WSS4.0KW-4
25	1520	56.64	28500	1.75	KF 87 WSS4.0KW-4
29	1320	49.16	28600	2.0	KA 87 WSS4.0KW-4
32	1180	44.02	28300	2.2	KAF 87 WSS4.0KW-4
39	980	36.52	27300	2.5	
22	1740	64.75	13900	0.90	
24	1570	58.34	15200	1.00	K 77 WSS4.0KW-4
28	1380	51.18	16500	1.15	KF 77 WSS4.0KW-4
31	1210	45.16	17400	1.30	KA 77 WSS4.0KW-4
35	1080	40.04	18000	1.45	KAF 77 WSS4.0KW-4
37	1030	38.39	18200	1.45	
40	950	35.20	18500	1.65	
46	830	30.89	18900	1.85	K 77 WSS4.0KW-4
49	785	29.27	19000	1.95	KF 77 WSS4.0KW-4
55	690	25.62	19300	2.2	KA 77 WSS4.0KW-4
62	620	23.08	19500	2.5	KAF 77 WSS4.0KW-4
70	545	20.25	19600	2.8	
47	810	30.22	10400	1.00	K 67 WSS4.0KW-4
52	735	27.28	11000	1.10	KF 67 WSS4.0KW-4
59	645	24.00	11600	1.25	KA 67 WSS4.0KW-4
63	610	22.66	11800	1.30	KAF 67 WSS4.0KW-4
74	520	19.30	12300	1.45	
81	470	17.54	12500	1.55	
94	410	15.19	12800	1.70	K 67 WSS4.0KW-4
107	355	13.22	13000	1.90	KF 67 WSS4.0KW-4
114	335	12.48	13000	1.60	KA 67 WSS4.0KW-4
134	285	10.63	13000	1.75	KAF 67 WSS4.0KW-4
147	260	9.66	12900	1.85	
170	225	8.37	12500	1.95	
195	196	7.28	12100	2.1	

Output speed n_a [r/min] Скорость на выходном валу па [об/мин]	Output torque M_a [N・m] Крутящий момент на выходе Ma [Нм]	Ratio i Передат очное число i	Permitted overhung load F_{Ra} [N] Допустимая внешняя радиальная нагрузка FRa [Н]	Service factor f_B Сервис-фактор fB	Model Модель
4.0kW					
59	645	24.05	6120	0.95	K 57 WSS4.0KW-4
63	610	22.71	6160	1.00	KF 57 WSS4.0KW-4
73	520	19.34	6220	1.10	KA 57 WSS4.0KW-4
81	475	17.57	6230	1.15	KAF 57 WSS4.0KW-4
93	410	15.22	6210	1.30	
107	355	13.25	6150	1.45	
119	320	11.92	5810	1.30	
126	305	11.26	5790	1.35	
148	260	9.59	5700	1.55	
163	235	8.71	5640	1.65	
188	205	7.55	5530	1.80	
216	177	6.57	5400	1.95	
5.5kW					
0. 79	61100	1821	170200	0. 80	K 187RF97 WSS5.5KW-4
0. 89	53900	1605	183200	0. 95	
1. 0	46700	1395	190000	1. 05	
1. 2	40100	1196	190000	1. 25	
1. 4	35100	1046	190000	1. 45	
1. 5	31700	945	190000	1. 60	
1. 9	24800	738	190000	2. 0	
2. 3	20800	621	190000	2. 4	
1. 3	36900	1101	150000	0. 85	K 167RF97 WSS5.5KW-4
1. 5	31700	944	150000	1. 00	
1. 7	28200	843	150000	1. 15	
1. 9	25400	757	150000	1. 25	
2. 3	21200	632	150000	1. 50	
2. 5	18700	561	150000	1. 70	
3. 0	16100	481	150000	2. 0	
3. 4	14100	423	150000	2. 3	
2. 2	22100	661	109900	0. 80	K 157RF97 WSS5.5KW-4
2. 5	19000	567	111700	0. 95	KF 157RF97 WSS5.5KW-4
2. 8	16900	504	112700	1. 05	KA 157RF97 WSS5.5KW-4
3. 3	14500	434	113800	1. 25	KAF 157RF97 WSS5.5KW-4
3. 8	12700	379	114500	1. 40	
4. 3	11100	333	115000	1. 60	
3. 4	14100	418	77800	0. 90	K 127RF87 WSS5.5KW-4
3. 9	12400	367	79500	1. 05	KF 127RF87 WSS5.5KW-4
4. 3	11100	330	80200	1. 15	KA 127RF87 WSS5.5KW-4
5. 0	9620	287	80800	1. 35	KAF 127RF87 WSS5.5KW-4
5. 6	8510	253	81300	1. 55	
6. 7	7150	213	81700	1. 80	
7. 1	6740	200	81900	1. 80	
8. 6	5580	166	82200	2. 2	
9. 8	4920	147	82300	2. 4	
6.4	7490	222	65000	1.05	K 107RF77 WSS5.5KW-4
7.3	6640	196	65000	1.20	KF 107RF77 WSS5.5KW-4
8.2	5870	174	65000	1.25	KA 107RF77 WSS5.5KW-4
9.3	5200	154	65000	1.40	KAF 107RF77 WSS5.5KW-4
10	4720	140	65000	1.55	
4. 7	11100	150. 41	115000	1. 60	K 157 WSS5.5KW-8
5. 8	9050	122. 39	115500	2. 0	KF 157 WSS5.5KW-8
7. 1	7410	100. 22	115900	2. 4	KA 157 WSS5.5KW-8
7. 8	6780	91. 65	116000	2. 7	KAF 157 WSS5.5KW-8
5.2	10100	136.14	80700	1. 30	K 127 WSS5.5KW-8
5.8	9060	122.48	81100	1.45	KF 127 WSS5.5KW-8
6.4	8150	110.18	81400	1.60	KA 127 WSS5.5KW-8
7.9	6650	89.89	81900	1.95	KAF 127 WSS5.5KW-8
7.1	7450	136.14	81600	1. 75	K 127 WSS5.5KW-6
7.8	6700	122.48	81900	1.95	KF 127 WSS5.5KW-6
8.7	6030	110.18	82100	2.2	KA 127 WSS5.5KW-6
11	4920	89.89	82300	2.6	KAF 127 WSS5.5KW-6
8.5	6150	112.41	65000	1.30	K 107 WSS5.5KW-6
9.5	5510	100.75	65000	1.45	KF 107 WSS5.5KW-6
11	4980	90.96	65000	1.60	KA 107 WSS5.5KW-6
12	4520	82.61	65000	1.75	KAF 107 WSS5.5KW-6

Output speed n_a [r/min] Скорость на выходном валу па [об/мин]	Output torque M_a [N・m] Крутящий момент на выходе Ma [Нм]	Ratio i Передат очное число i	Permitted overhung load F_{Ra} [N] Допустимая внешняя радиальная нагрузка FRa [Н]	Service factor f_B Сервис-фактор fB	Model Модель
5.5kW					
10	5270	143.47	65000	1.50	K 107 WSS5.5KW-4
12	4460	121.46	65000	1.80	KF 107 WSS5.5KW-4
13	4130	112.41	65000	1.95	KA 107 WSS5.5KW-4
14	3700	100.75	65000	2.2	KAF 107 WSS5.5KW-4
16	3340	90.96	65000	2.4	
17	3030	82.61	65000	2.6	
12	4550	123.93	40000	0.95	K 97 WSS5.5KW-4
14	3860	105.13	40000	1.10	KF 97 WSS5.5KW-4
15	3560	96.80	40000	1.20	KA 97 WSS5.5KW-4
17	3180	86.52	40000	1.35	KAF 97 WSS5.5KW-4
18	2860	77.89	40000	1.50	K 97 WSS5.5KW-4
20	2590	70.54	40000	1.65	KF 97 WSS5.5KW-4
23	2300	62.55	40000	1.85	KA 97 WSS5.5KW-4
25	2080	56.55	39700	2.1	KAF 97 WSS5.5KW-4
30	1760	47.93	38600	2.4	
17	3170	86.34	26600	0.85	K 87 WSS5.5KW-4
18	2910	79.34	27000	0.95	KF 87 WSS5.5KW-4
20	2590	70.46	27400	1.05	KA 87 WSS5.5KW-4
23	2310	63.00	27500	1.15	KAF 87 WSS5.5KW-4
25	2080	56.64	27300	1.30	
29	1810	49.16	26900	1.50	K 87 WSS5.5KW-4
32	1620	44.02	26500	1.60	KF 87 WSS5.5KW-4
39	1340	36.52	25800	1.85	KA 87 WSS5.5KW-4
46	1150	31.39	25200	2.3	KAF 87 WSS5.5KW-4
51	1020	27.88	24700	2.5	
32	1660	45.16	14600	0.95	K 77 WSS5.5KW-4
36	1470	40.04	15900	1.05	KF 77 WSS5.5KW-4
46	1130	30.89	17800	1.35	KA 77 WSS5.5KW-4
49	1070	29.27	18000	1.45	KAF 77 WSS5.5KW-4
56	940	25.62	18500	1.65	
62	850	23.08	18800	1.85	K 77 WSS5.5KW-4
71	745	20.25	19100	2.0	KF 77 WSS5.5KW-4
80	655	17.87	19400	2.2	KA 77 WSS5.5KW-4
90	580	15.84	19200	2.4	KAF 77 WSS5.5KW-4
106	495	13.52	18600	2.7	
116	455	12.36	17900	2.2	
132	400	10.84	17400	2.5	
60	880	24.00	9720	0.90	K 67 WSS5.5KW-4
63	830	22.66	10200	0.95	KF 67 WSS5.5KW-4
74	710	19.30	11200	1.05	KA 67 WSS5.5KW-4
82	645	17.54	11600	1.15	KAF 67 WSS5.5KW-4
94	560	15.19	12100	1.25	
108	485	13.22	12500	1.40	
115	460	12.48	12600	1.15	K 67 WSS5.5KW-4
135	390	10.63	12400	1.30	KF 67 WSS5.5KW-4
148	355	9.66	12200	1.35	KA 67 WSS5.5KW-4
171	305	8.37	11900	1.45	KAF 67 WSS5.5KW-4
196	265	7.28	11600	1.55	
7.5kW					
1.7	38200	835	190000	1.30	K 187RF107 WSS7.5KW-4
2.0	33300	729	190000	1.50	
2.3	28400	622	190000	1.75	
1.2	55000	1196	181400	0.90	K 187RF97 WSS7.5KW-4
1.4	48000	1046	190000	1.05	
1.5	43400	945	190000	1.15	
1.9	33900	738	190000	1.45	
2.3	28500	621	190000	1.75	
2.7	24100	527	190000	2.1	

Output speed n_a [r/min] Скорость на выходном валу па [об/мин]	Output torque M_a [N・m] Крутящий момент на выходе Ma [Нм]	Ratio i Передат очное число i	Permitted overhung load F_{Ra} [N] Допустимая внешняя радиальная нагрузка FRa [Н]	Service factor f_B Сервис-фактор fB	Model Модель
7.5kW					
1.7	38700	843	150000	0.85	K 167RF97 WSS7.5KW-4
1.9	34700	757	150000	0.90	
2.3	29000	632	150000	1.10	
2.5	25700	561	150000	1.25	
3.0	22100	481	150000	1.45	
3.4	19400	423	150000	1.65	
3.9	16900	369	150000	1.90	
3.3	19900	434	111200	0.90	K 157RF97 WSS7.5KW-4
3.8	17400	379	112500	1.05	KF 157RF97 WSS7.5KW-4
4.3	15300	333	113500	1.20	KA 157RF97 WSS7.5KW-4
4.9	13300	291	114200	1.35	KAF 157RF97 WSS7.5KW-4
4.3	15200	330	75500	0.85	K 127RF87 WSS7.5KW-4
5.0	13200	287	79100	1.00	KF 127RF87 WSS7.5KW-4
5.6	11600	253	79900	1.10	KA 127RF87 WSS7.5KW-4
6.7	9790	213	80800	1.35	KAF 127RF87 WSS7.5KW-4
7.1	9220	200	81000	1.30	
8.6	7640	166	81600	1.55	
9.8	6740	147	81900	1.80	
4.4	16400	164.50	150000	1.95	K 167 WSS7.5KW-8
5.3	13400	134.99	150000	2.4	
5.8	12300	164.50	150000	2.6	K 167 WSS7.5KW-6
7.1	10100	134.99	150000	3.2	
6.4	11200	150.41	114900	1.60	K 157 WSS7.5KW-6
7.8	9130	122.39	115500	1.95	KF 157 WSS7.5KW-6
9.6	7480	100.22	115900	2.4	KA 157 WSS7.5KW-6
10	6840	91.65	116000	2.6	KAF 157 WSS7.5KW-6
12	5950	79.75	116200	3.0	
7.1	10200	136.14	80600	1.30	K 127 WSS7.5KW-6
7.8	9140	122.48	81000	1.40	KF 127 WSS7.5KW-6
8.7	8220	110.18	81400	1.60	KA 127 WSS7.5KW-6
11	6710	89.89	81900	1.95	KAF 127 WSS7.5KW-6
9.8	7320	146.07	81700	1.80	K 127 WSS7.5KW-4
11	6820	136.14	81800	1.90	KF 127 WSS7.5KW-4
12	6130	122.48	82000	2.1	KA 127 WSS7.5KW-4
13	5520	110.18	82200	2.4	KAF 127 WSS7.5KW-4
16	4500	89.89	82400	2.9	
17	4110	81.98	82500	3.2	
20	3550	70.95	82600	3.7	
10	7190	143.47	65000	1.10	K 107 WSS7.5KW-4
12	6080	121.46	65000	1.30	KF 107 WSS7.5KW-4
13	5630	112.41	65000	1.40	KA 107 WSS7.5KW-4
					KAF 107 WSS7.5KW-4
14	5050	100.75	65000	1.60	K 107 WSS7.5KW-4
16	4560	90.96	64200	1.75	KF 107 WSS7.5KW-4
17	4140	82.61	63200	1.95	KA 107 WSS7.5KW-4
20	3670	73.30	61900	2.2	KAF 107 WSS7.5KW-4
22	3330	66.52	60900	2.4	
25	2860	57.17	59100	2.8	
29	2500	49.90	57500	3.1	
34	2120	42.33	55500	3.5	
39	1850	37.00	53800	3.9	
15	4850	96.80	38300	0.90	K 97 WSS7.5KW-4
17	4330	86.52	38300	1.00	KF 97 WSS7.5KW-4
18	3900	77.89	38100	1.10	KA 97 WSS7.5KW-4
20	3530	70.54	37900	1.20	KAF 97 WSS7.5KW-4
23	3130	62.55	37500	1.35	

Output speed n_a [r/min] Скорость на выходном валу па [об/мин]	Output torque M_a [N・m] Крутящий момент на выходе Ma [Нм]	Ratio i Передат очное число i	Permitted overhung load F_{Ra} [N] Допустимая внешняя радиальная нагрузка FRa [Н]	Service factor f_B Сервис-фактор fB	Model Модель
7.5kW					
25	2830	56.55	37100	1.50	K 97 WSS7.5KW-4
30	2400	47.93	36400	1.80	KF 97 WSS7.5KW-4
34	2100	41.87	35600	2.0	KA 97 WSS7.5KW-4
37	1920	38.30	35100	2.2	KAF 97 WSS7.5KW-4
42	1710	34.23	34400	2.5	
23	3160	63.00	24100	0.85	K 87 WSS7.5KW-4
25	2840	56.64	24200	0.95	KF 87 WSS7.5KW-4
29	2460	49.16	24200	1.10	KA 87 WSS7.5KW-4
32	2200	44.02	24200	1.20	KAF 87 WSS7.5KW-4
39	1830	36.52	23900	1.35	
46	1570	31.39	23500	1.70	K 87 WSS7.5KW-4
51	1400	27.88	23200	1.85	KF 87 WSS7.5KW-4
57	1250	24.92	22800	2.0	KA 87 WSS7.5KW-4
64	1120	22.41	22500	2.0	KAF 87 WSS7.5KW-4
74	970	19.45	21900	2.4	
82	870	17.42	21500	2.5	
89	800	16.00	20600	2.2	
99	725	14.45	20700	2.9	
46	1550	30.89	15400	1.00	K 77 WSS7.5KW-4
49	1470	29.27	16000	1.05	KF 77 WSS7.5KW-4
56	1280	25.62	17000	1.20	KA 77 WSS7.5KW-4
62	1160	23.08	17700	1.35	KAF 77 WSS7.5KW-4
71	1010	20.25	18300	1.50	
80	890	17.87	18600	1.60	K 77 WSS7.5KW-4
90	795	15.84	18200	1.75	KF 77 WSS7.5KW-4
106	675	13.52	17800	2.0	KA 77 WSS7.5KW-4
116	620	12.36	17000	1.60	KAF 77 WSS7.5KW-4
132	545	10.84	16700	1.80	
150	480	9.56	16300	1.95	
169	425	8.48	15900	2.1	
198	365	7.24	15400	2.3	
11kW					
1.7	55900	835	179700	0.90	K187RF107 WSS11KW-4
2.0	48800	729	190000	1.05	
2.3	41600	622	190000	1.20	
2.8	34800	520	190000	1.45	
3.2	30400	454	190000	1.65	
4.1	23800	355	190000	2.1	
2.0	49600	738	190000	1.00	K187RF97 WSS11KW-4
2.3	41700	621	190000	1.20	
2.7	35300	527	190000	1.40	
4.5	21300	318	150000	1.50	K167RF107 WSS11KW-4
5.2	18600	278	150000	1.70	
5.9	16300	244	150000	1.95	
6.8	14200	213	150000	2.2	
7.0	13700	206	150000	2.3	
2.6	37500	561	150000	0.85	K167RF97 WSS11KW-4
3.0	32300	481	150000	1.00	
3.4	28300	423	150000	1.15	
3.9	24700	369	150000	1.30	
4.3	22300	333	109700	0.80	K 157RF97 WSS11KW-4
4.9	19500	291	111400	0.90	KF 157RF97 WSS11KW-4
					KA 157RF97 WSS11KW-4
					KAF 157RF97 WSS11KW-4
6.8	14300	213	77400	0.90	K 127RF87 WSS11KW-4
7.2	13500	200	78900	0.90	KF 127RF87 WSS11KW-4
8.7	11200	166	80100	1.10	KA 127RF87 WSS11KW-4
9.8	9850	147	80700	1.20	KAF 127RF87 WSS11KW-4
5.3	19700	134.99	150000	1.60	K167 WSS11KW-4
6.6	16000	109.83	150000	2.0	
5.8	18000	164.50	150000	2.7	K167 WSS11KW-4
7.1	14800	134.99	150000	3.2	
8.8	12000	164.50	150000	1.80	K167 WSS11KW-4
11	9850	134.99	150000	2.2	

Output speed n_a [r/min] Скорость на выходном валу па [об/мин]	Output torque M_a [N • m] Крутящий момент на выходе Ма [Нм]	Ratio i Передат очное число i	Permitted overhung load F_{Ra} [N] Допустимая внешняя радиальная нагрузка FRa [Н]	Service factor f_B Сервис-фактор fB	Model Модель
11.0kW					
5.9	17900	122.39	112300	1.00	K 107 WSS11KW-8
7.2	14600	100.32	113700	1.25	KF 107 WSS11KW-8
7.9	13400	91.65	114200	1.35	KA 107 WSS11KW-8
9.0	11600	79.75	114800	1.55	KAF 107 WSS11KW-8
6.4	16500	150.41	112900	1.10	K 157 WSS11KW-6
7.8	13400	122.39	114200	1.35	KF 157 WSS11KW-6
9.6	11000	100.22	115000	1.65	KA 157 WSS11KW-6
10	10000	91.65	115300	1.80	KAF 157 WSS11KW-6
12	8730	79.75	115600	2.1	
9.6	11000	150.41	115000	1.65	K 157 WSS11KW-4
12	8930	122.39	115600	2.0	KF 157 WSS11KW-4
14	7310	100.32	115900	2.5	KA 157 WSS11KW-4
16	6690	91.65	116000	2.7	KAF 157 WSS11KW-4
11	9930	136.14	80700	1.30	
12	8930	122.48	81100	1.45	K 127 WSS11KW-4
13	8040	110.18	81400	1.60	KF 127 WSS11KW-4
16	6560	89.89	81900	2.0	KA 127 WSS11KW-4
18	5980	81.98	82100	2.2	KAF 127 WSS11KW-4
20	5180	70.95	82300	2.5	
13	8200	112.41	58400	1.00	K 107 WSS11KW-4
14	7350	100.75	58300	1.10	KF 107 WSS11KW-4
16	6630	90.96	58000	1.20	KA 107 WSS11KW-4
17	6030	82.61	57500	1.35	KAF 107 WSS11KW-4
20	5350	73.30	26900	1.50	
22	4850	66.52	56200	1.65	K 107 WSS11KW-4
25	4170	57.17	55100	1.90	KF 107 WSS11KW-4
29	3640	49.90	54000	2.2	KA 107 WSS11KW-4
34	3090	42.33	52500	2.4	KAF 107 WSS11KW-4
39	2700	37.00	51200	2.7	
20	5150	70.54	32200	0.85	K 97 WSS11KW-4
23	4560	62.55	32500	0.95	KF 97 WSS11KW-4
25	4130	56.55	32500	1.05	KA 97 WSS11KW-4
30	3500	47.93	32500	1.25	KAF 97 WSS11KW-4
34	3050	41.87	32200	1.40	
38	2790	38.30	32000	1.55	
42	2500	34.23	31600	1.70	K 97 WSS11KW-4
47	2250	30.82	31300	1.90	KF 97 WSS11KW-4
52	2040	27.91	30800	2.1	KA 97 WSS11KW-4
58	1800	24.75	30300	2.4	KAF 97 WSS11KW-4
64	1630	22.37	29800	2.6	
33	3210	44.02	20000	0.80	
39	2660	36.52	20400	0.95	K 87 WSS11KW-4
46	2290	31.39	20600	1.20	KF 87 WSS11KW-4
52	2030	27.88	20600	1.30	KA 87 WSS11KW-4
58	1820	24.92	20500	1.40	KAF 87 WSS11KW-4
64	1630	22.41	20300	1.40	
74	1420	19.45	20100	1.60	
83	1270	17.42	19800	1.75	
90	1170	16.00	18800	1.55	K 87 WSS11KW-4
100	1050	14.45	19400	2.0	KF 87 WSS11KW-4
115	920	12.56	18900	2.2	KA 87 WSS11KW-4
129	810	11.17	18000	1.85	KAF 87 WSS11KW-4
144	730	10.00	17700	2.1	
174	605	8.29	17100	2.3	
200	525	7.21	16700	2.5	
62	1680	23.08	14400	0.90	
71	1480	20.25	15900	1.00	
81	1300	17.87	16600	1.10	
91	1160	15.84	16500	1.20	K 77 WSS11KW-4
107	990	13.52	16300	1.35	KF 77 WSS11KW-4
117	900	12.36	15500	1.10	KA 77 WSS11KW-4
133	790	10.84	15300	1.25	KAF 77 WSS11KW-4
151	700	9.56	15100	1.35	
170	620	8.48	14800	1.45	
199	530	7.24	14500	1.55	
15.0kW					
2.3	56100	622	179400	0.90	
2.8	47000	520	190000	1.05	
3.2	41000	454	190000	1.20	K 187RF107WSS15KW-4
4.1	32100	355	190000	1.55	
5.6	23600	261	190000	2.1	

Output speed n_a [r/min] Скорость на выходном валу па [об/мин]	Output torque M_a [N • m] Крутящий момент на выходе Ма [Нм]	Ratio i Передат очное число i	Permitted overhung load F_{Ra} [N] Допустимая внешняя радиальная нагрузка FRa [Н]	Service factor f_B Сервис-фактор fB	Model Модель
15.0kW					
4.6	28700	318	150000	1.10	
5.3	25000	278	150000	1.30	
6.0	22000	244	150000	1.45	
6.8	19200	213	150000	1.65	K 167RF107WSS15KW-4
7.1	18500	206	150000	1.75	
8.1	16200	180	150000	1.95	
9.1	14400	160	150000	2.2	
6.3	20700	230	110700	0.85	
6.9	19200	213	116000	0.95	K 157RF107WSS15KW-4
7.8	16800	187	112800	1.05	KF 157RF107WSS15KW-4
9.3	14200	157	113900	1.25	KA 157RF107WSS15KW-4
12	11000	122	115000	1.65	KAF 157RF107WSS15KW-4
14	9630	107	115400	1.85	
5.4	26600	179.86	190000	1.90	K 187 WSS15KW-6
5.9	24400	165.21	190000	2.0	
7.2	19900	134.99	150000	1.60	K 167 WSS15KW-6
8.8	16200	109.83	150000	1.95	
8.9	16100	164.50	150000	2.0	K 167 WSS15KW-4
11	13200	134.99	150000	2.4	
7.9	18100	122.39	112200	1.00	K 157 WSS15KW-6
9.7	14800	100.22	113700	1.20	KF 157 WSS15KW-6
11	13500	91.65	114100	1.35	KA 157 WSS15KW-6
12	11800	79.75	114800	1.55	KAF 157 WSS15KW-6
14	10400	70.38	115200	1.75	
9.7	14800	150.41	113700	1.20	K 157 WSS15KW-4
12	12000	122.39	114700	1.50	KF 157 WSS15KW-4
15	9830	100.22	114200	1.85	KA 157 WSS15KW-4
16	8990	91.65	112500	2.0	KAF 157 WSS15KW-4
18	7820	79.75	109600	2.3	
11	13400	136.14	79000	0.95	K 127 WSS15KW-4
12	12000	122.48	79700	1.10	KF 127 WSS15KW-4
13	10800	110.18	80300	1.20	KA 127 WSS15KW-4
					KAF 127 WSS15KW-4
16	8820	89.89	81200	1.45	
18	8040	81.98	81400	1.60	K 127 WSS15KW-4
21	6960	70.95	81600	1.85	KF 127 WSS15KW-4
23	6140	62.60	80000	2.1	KA 127 WSS15KW-4
27	5300	54.07	78000	2.5	KAF 127 WSS15KW-4
31	4690	47.82	76200	2.8	
16	8920	90.96	50900	0.90	K 107 WSS15KW-4
18	8110	82.61	51100	1.00	KF 107 WSS15KW-4
20	7190	73.30	51200	1.10	KA 107 WSS15KW-4
22	6530	66.52	51000	1.25	KAF 107 WSS15KW-4
26	5610	57.17	50600	1.45	
29	4900	49.90	50000	1.60	K 107 WSS15KW-4
34	4150	42.33	49100	1.75	KF 107 WSS15KW-4
39	3630	37.00	48200	2.0	KA 107 WSS15KW-4
45	3210	32.69	47300	2.2	KAF 107 WSS15KW-4
47	3070	31.28	47000	2.2	
50	2840	29.00	46400	2.5	
30	4700	47.93	28100	0.90	K 97 WSS15KW-4
35	4110	41.87	28400	1.05	KF 97 WSS15KW-4
38	3760	38.30	28500	1.15	KA 97 WSS15KW-4
43	3360	34.23	28500	1.30	KAF 97 WSS15KW-4
47	3020	30.82	28400	1.40	
52	2740	27.91	28300	1.55	K 97 WSS15KW-4
59	2430	24.75	28000	1.75	KF 97 WSS15KW-4
65	2190	22.37	27700	1.95	KA 97 WSS15KW-4
77	1860	18.96	27200	2.3	KAF 97 WSS15KW-4
88	1620	16.56	26600	2.7	
47	3080	31.39	17300	0.90	K 87 WSS15KW-4
52	2730	27.88	17600	0.95	KF 87 WSS15KW-4
59	2440	24.92	17800	1.00	KA 87 WSS15KW-4
65	2200	22.41	18000	1.05	KAF 87 WSS15KW-4
75	1910	19.45	18000	1.20	
84	1710	17.42	18000	1.30	

Цилиндро-конические мотор-редукторы серии K/ K Helical-Bevel Geared Motor K
Committed to building a world-class electromechanical brand
СОЗДАЕМ ЭЛЕКТРОМЕХАНИЧЕСКИЙ БРЕНД МИРОВОГО КЛАССА

Output speed n_a [r/min] Скорость на выходном валу па [об/мин]	Output torque M_a [N • m] Крутящий момент на выходе Ма [Нм]	Ratio i Передат очное число i	Permitted overhung load F_{Ra} [N] Допустимая внешняя радиальная нагрузка FRa [Н]	Service factor f_B Сервис-фактор fB	Model Модель
15.0kW					
91	1570	16.00	16800	1.15	
101	1420	14.45	17800	1.50	K 87 WSS15KW-4
116	1230	12.56	17600	1.60	KF 87 WSS15KW-4
131	1100	11.17	16600	1.35	KA 87 WSS15KW-4
146	980	10.00	16400	1.55	KAF 87 WSS15KW-4
176	810	8.29	16000	1.70	
202	705	7.21	15700	1.85	
18.5kW					
2.8	57800	520	176300	0.85	K 187RF107WSS18.5KW-4
3.2	50400	454	189200	1.00	KF 187RF107WSS18.5KW-4
4.1	39500	355	190000	1.25	KA 187RF107WSS18.5KW-4
5.6	29000	261	190000	1.70	KAF 187RF107WSS18.5KW-4
6.6	24600	221	190000	2.0	
4.6	35300	318	150000	0.90	
5.3	30800	278	150000	1.05	
6.0	27100	244	150000	1.20	K 167RF107WSS18.5KW-4
6.9	23600	213	150000	1.35	KF 167RF107WSS18.5KW-4
7.1	22800	206	150000	1.40	KA 167RF107WSS18.5KW-4
8.1	20000	180	150000	1.60	KAF 167RF107WSS18.5KW-4
9.2	17700	160	150000	1.80	
11	15000	135	150000	2.1	
12	13100	118	150000	2.4	
7.8	20700	187	110700	0.85	K 157RF107WSS18.5KW-4
9.3	17400	157	112500	1.05	KF 157RF107WSS18.5KW-4
12	13600	122	114100	1.35	KA 157RF107WSS18.5KW-4
14	11900	107	112300	1.50	KAF 157RF107WSS18.5KW-4
5.4	32800	179.86	190000	1.55	K 187 WSS18.5KW-6
5.9	30100	165.21	190000	1.65	KF 187 WSS18.5KW-6
6.7	26300	144.59	190000	1.90	KA 187 WSS18.5KW-6
7.5	23600	129.69	190000	2.1	KAF 187 WSS18.5KW-6
8.1	21700	179.86	190000	2.3	
8.9	19900	165.21	190000	2.5	K 187 WSS18.5KW-4
10	17400	144.59	190000	2.9	
11	15600	129.69	190000	3.2	
11	16300	134.99	150000	1.95	
13	13200	109.83	150000	2.4	K 167 WSS18.5KW-4
17	10600	87.86	150000	3.0	
9.7	18300	100.22	112100	1.00	K 157 WSS18.5KW-6
11	16700	91.65	112800	1.10	KF 157 WSS18.5KW-6
12	14500	79.75	111500	1.25	KA 157 WSS18.5KW-6
14	12800	70.38	109900	1.40	KAF 157 WSS18.5KW-6
12	14800	122.39	111600	1.20	
15	12100	100.22	109100	1.50	
16	11100	91.65	107800	1.65	K 157 WSS18.5KW-4
18	9620	79.75	105600	1.85	KF 157 WSS18.5KW-4
21	8490	70.38	103400	2.1	KA 157 WSS18.5KW-4
24	7360	61.02	100700	2.5	KAF 157 WSS18.5KW-4
27	6550	54.29	98500	2.8	
31	5640	46.79	95500	3.2	
39	4580	38.02	91300	3.9	
					K 127 WSS18.5KW-4
13	13300	110.18	79000	1.00	KF 127 WSS18.5KW-4
16	10800	89.89	79000	1.20	KA 127 WSS18.5KW-4
18	9890	81.98	78500	1.30	KAF 127 WSS18.5KW-4
21	8560	70.95	77500	1.50	
23	7550	62.60	76400	1.70	
27	6520	54.07	74800	2.0	K 127 WSS18.5KW-4
31	5770	47.82	73400	2.2	KF 127 WSS18.5KW-4
36	4850	40.19	71300	2.7	KA 127 WSS18.5KW-4
40	4370	36.25	69900	3.0	KAF 127 WSS18.5KW-4
47	3780	31.37	68000	3.4	
53	3340	27.68	66200	3.9	
20	8840	73.30	46300	0.90	K 107 WSS18.5KW-4
22	8020	66.52	46600	1.00	KF 107 WSS18.5KW-4
26	6890	57.17	46800	1.15	KA 107 WSS18.5KW-4
29	6020	49.90	46700	1.30	KAF 107 WSS18.5KW-4

Output speed n_a [r/min] Скорость на выходном валу па [об/мин]	Output torque M_a [N • m] Крутящий момент на выходе Ма [Нм]	Ratio i Передат очное число i	Permitted overhung load F_{Ra} [N] Допустимая внешняя радиальная нагрузка FRa [Н]	Service factor f_B Сервис-фактор fB	Model Модель
18.5kW					
35	5100	42.33	46300	1.45	
40	4400	37.00	45700	1.60	
45	3940	32.69	45100	1.85	K 107 WSS18.5KW-4
47	3770	31.28	44900	1.80	KF 107 WSS18.5KW-4
51	3500	29.00	44400	2.1	KA 107 WSS18.5KW-4
56	3170	26.32	43800	2.3	KAF 107 WSS18.5KW-4
65	2730	22.62	42700	2.6	
74	2380	19.74	41700	3.0	
88	2020	16.75	40400	3.5	
35	5050	41.87	25100	0.85	K 97 WSS18.5KW-4
48	3720	30.82	26000	1.15	KF 97 WSS18.5KW-4
53	3360	27.91	26000	1.30	KA 97 WSS18.5KW-4
59	2980	24.75	26000	1.45	KAF 97 WSS18.5KW-4
65	2700	22.37	25900	1.60	K 97 WSS18.5KW-4
77	2290	18.96	25700	1.90	KF 97 WSS18.5KW-4
88	2000	16.56	25300	2.2	KA 97 WSS18.5KW-4
106	1670	13.85	24800	2.6	KAF 97 WSS18.5KW-4
122	1450	11.99	24300	2.7	
59	3000	24.92	15600	0.85	
65	2700	22.41	15900	0.85	
75	2340	19.45	16200	1.00	
84	2100	17.42	16400	1.05	K 87 WSS18.5KW-4
101	1740	14.45	16500	1.20	KF 87 WSS18.5KW-4
117	1510	12.56	16400	1.30	KA 87 WSS18.5KW-4
131	1350	11.17	15400	1.10	KAF 87 WSS18.5KW-4
147	1210	10.00	15300	1.25	
177	1000	8.29	15100	1.40	
203	870	7.21	14900	1.50	
22.kW					
3.2	60000	454	172300	0.85	
4.1	47000	355	190000	1.05	
5.6	34500	261	190000	1.45	K187RF107WSS22KW-4
6.6	29300	221	190000	1.70	
7.6	25600	193	190000	1.95	
8.9	21600	163	190000	2.3	
5.3	36700	278	150000	0.85	
6.0	32200	244	150000	1.00	
6.9	28200	213	150000	1.15	
7.1	27200	206	150000	1.20	K167RF107WSS22KW-4
8.1	23800	180	150000	1.35	
9.2	21100	160	150000	1.50	
11	17900	135	150000	1.80	
12	15600	118	150000	2.0	
9.3	20800	157	109800	0.85	K 157RF107WSS22KW-4
12	16200	122	108600	1.10	KF 157RF107WSS22KW-4
14	14100	107	107300	1.25	KA 157RF107WSS22KW-4
					KAF 157RF107WSS22KW-4
5.4	39000	179.86	190000	1.30	
5.9	35800	165.21	190000	1.40	
6.7	31300	144.59	190000	1.60	K 187 WSS22KW-6
7.5	28100	129.69	190000	1.80	
8.6	24400	112.60	190000	2.0	
8.1	25800	179.86	190000	1.95	
8.9	23700	165.21	190000	2.1	K 187 WSS22KW-4
10	20700	144.59	190000	2.4	
11	18600	129.69	190000	2.9	
11	19400	134.99	150000	1.65	
13	15700	109.83	150000	2.0	K 167 WSS22KW-4
17	12600	87.86	150000	2.5	
19	11200	78.14	150000	2.9	
9.7	21700	100.22	105900	0.85	
11	19900	91.65	105900	0.90	K 157 WSS22KW-6
12	17300	79.75	105500	1.05	KF 157 WSS22KW-6
14	15200	70.38	104600	1.20	KA 157 WSS22KW-6
16	13200	61.02	103300	1.35	KAF 157 WSS22KW-6
12	17600	122.39	105500	1.05	
15	14400	100.22	104100	1.25	
16	13100	91.65	103200	1.35	K 157 WSS22KW-4
18	11400	79.75	101600	1.55	KF 157 WSS22KW-4
21	10100	70.38	99800	1.80	KA 157 WSS22KW-4
24	8750	61.02	97700	2.1	KAF 157 WSS22KW-4
27	7790	54.29	95800	2.3	
31	6710	46.79	93200	2.7	
39	5450	38.02	89400	3.3	

Output speed n_a [r/min] Скорость на выходном валу па [об/мин]	Output torque M_a [N・m] Крутящий момент на выходе Ма [Нм]	Ratio i Передат очное число i	Permitted overhung load F_{Ra} [N] Допустимая внешняя радиальная нагрузка FRa [H]	Service factor f_B Сервис-фактор fB		Model Модель
22kW						
16	12900	89.89	73900	1.00	K 127	WSS22KW-4
18	11800	81.98	73800	1.10	KF 127	WSS22KW-4
21	10200	70.95	73400	1.30	KA 127	WSS22KW-4
23	8980	62.60	72800	1.45	KAF 127	WSS22KW-4
27	7750	54.07	71700	1.70		
31	6860	47.82	70700	1.90		
36	5760	40.19	69000	2.3	K 127	WSS22KW-4
40	5200	36.25	67800	2.5	KF 127	WSS22KW-4
47	4500	31.37	66200	2.9	KA 127	WSS22KW-4
53	3970	27.68	64600	3.3	KAF 127	WSS22KW-4
61	3430	23.91	62800	3.8		
69	3030	21.15	61200	4.3		
26	8200	57.17	43000	1.00	K 107	WSS22KW-4
29	7160	49.90	43300	1.10	KF 107	WSS22KW-4
35	6070	42.33	43400	1.20	KA 107	WSS22KW-4
					KAF 107	WSS22KW-4
40	5310	37.00	43200	1.35		
45	4690	32.69	42900	1.55		
47	4490	31.28	42800	1.50		
51	4160	29.00	42500	1.75		
56	3770	26.32	42000	1.90	K 107	WSS22KW-4
65	3240	22.62	41200	2.2	KF 107	WSS22KW-4
74	2830	19.74	40400	2.5	KA 107	WSS22KW-4
88	2400	16.75	39300	2.9	KAF 107	WSS22KW-4
100	2100	14.64	38400	3.3		
109	1930	13.43	36800	2.2		
125	1680	11.73	35900	2.6		
147	1430	9.94	34800	2.9		
48	4420	30.82	23500	0.95	K 97	WSS22KW-4
53	4000	27.91	23800	1.05	KF 97	WSS22KW-4
59	3550	24.75	24100	1.20	KA 97	WSS22KW-4
65	3210	22.37	24200	1.35	KAF 97	WSS22KW-4
77	2720	18.96	24100	1.60		
88	2370	16.56	24000	1.80	K 97	WSS22KW-4
106	1990	13.85	23700	2.2	KF 97	WSS22KW-4
122	1720	11.99	23300	2.3	KA 97	WSS22KW-4
141	1490	10.41	21800	1.90	KAF 97	WSS22KW-4
168	1250	8.71	21300	2.1		
75	2790	19.45	14400	0.80		
84	2500	17.42	14800	0.90		
101	2070	14.45	15100	1.00	K 87	WSS22KW-4
117	1800	12.56	15300	1.10	KF 87	WSS22KW-4
131	1600	11.17	14200	0.95	KA 87	WSS22KW-4
147	1430	10.00	14200	1.05	KAF 87	WSS22KW-4
177	1190	8.29	14300	1.20		
203	1030	7.21	14200	1.25		
30.kW						
5.6	47000	261	190000	1.05		
6.6	39800	221	190000	1.25	K 187RF107	WSS30KW-4
7.6	34800	193	190000	1.45		
9.0	29400	163	190000	1.70		
6.9	38300	213	150000	0.85		
7.1	37000	206	150000	0.85		
8.1	32400	180	150000	1.00	K 167RF107	WSS30KW-4
9.2	28700	160	150000	1.10		
11	24400	135	150000	1.30		
12	21300	118	150000	1.50		
8.2	35100	179.86	190000	1.45		
8.9	32200	165.21	190000	1.55		
10	28200	144.59	190000	1.75		
11	25300	129.69	190000	2.0	K 187	WSS30KW-4
13	21900	112.60	190000	2.3		
14	19900	102.16	190000	2.5		
17	17200	88.00	190000	2.9		
13	21400	109.83	150000	1.50		
17	17100	87.86	150000	1.85	K 167	WSS30KW-4
19	15200	78.14	150000	2.1		
22	13300	68.07	150000	2.4		
24	11800	60.74	150000	2.7		

Output speed n_a [r/min] Скорость на выходном валу па [об/мин]	Output torque M_a [N・m] Крутящий момент на выходе Ма [Нм]	Ratio i Передат очное число i	Permitted overhung load F_{Ra} [N] Допустимая внешняя радиальная нагрузка FRa [H]	Service factor f_B Сервис-фактор fB		Model Модель
30kW						
15	19500	100.22	92700	0.90		
16	17900	91.65	92800	1.00		
18	15500	79.75	92400	1.15	K 157	WSS30KW-4
21	13700	70.38	91800	1.30	KF 157	WSS30KW-4
24	11900	61.02	90700	1.50	KA 157	WSS30KW-4
27	10600	54.29	89500	1.70	KAF 157	WSS30KW-4
31	9120	46.79	87800	1.95		
39	7410	38.02	85100	2.4		
47	6100	31.30	82200	3.0		
21	13800	70.95	64200	0.95		
23	12200	62.60	64600	1.05		
27	10500	54.07	64700	1.25	K 127	WSS30KW-4
31	9320	47.82	64400	1.40	KF 127	WSS30KW-4
37	7830	40.19	63700	1.65	KA 127	WSS30KW-4
41	7060	36.25	63100	1.85	KAF 127	WSS30KW-4
47	6110	31.37	62000	5.1		
53	5390	27.68	61000	2.4		
62	4660	23.91	59600	2.8		
35	8250	42.33	36100	0.90	K 107	WSS30KW-4
40	7210	37.00	37600	1.00	KF 107	WSS30KW-4
47	6100	31.28	38000	1.10	KA 107	WSS30KW-4
					KAF 107	WSS30KW-4
51	5650	29.00	38000	1.25		
56	5130	26.32	38000	1.40		
65	4410	22.62	37700	1.65		
74	3850	19.74	37400	1.85	K 107	WSS30KW-4
88	3260	16.75	36700	2.2	KF 107	WSS30KW-4
100	2850	14.64	36100	2.4	KA 107	WSS30KW-4
109	2620	13.43	34400	1.65	KAF 107	WSS30KW-4
125	2280	11.73	33800	1.90		
148	1940	9.94	33000	2.2		
169	1690	8.69	32200	2.4		
59	4820	24.75	19600	0.90		
66	4360	22.37	20100	1.00		
78	3690	18.96	20700	1.15	K 97	WSS30KW-4
89	3230	16.56	21000	1.35	KF 97	WSS30KW-4
106	2700	13.85	21200	1.60	KA 97	WSS30KW-4
123	2340	11.99	21100	1.65	KAF 97	WSS30KW-4
141	2030	10.41	19500	1.40		
169	1700	8.71	19400	1.55		
37kW						
5. 6	58000	261	176000	0. 85		
6. 6	49200	221	190000	1. 00	K 187RF107	WSS37KW-4
7. 6	43000	193	190000	1. 15		
9. 0	36300	163	190000	1. 40		
8. 1	40000	180	150000	0. 80		
9. 2	35500	160	150000	0. 90	K 167RF107	WSS37KW-4
11	30100	135	150000	1. 05		
12	36000	118	150000	1. 20		
8. 2	43200	179. 86	190000	1. 15		
8. 9	39700	165. 21	190000	1. 25		
10	34800	144. 59	190000	1. 45		
11	31200	129. 69	190000	1. 60	K 187	WSS37KW-4
13	27100	112. 60	190000	1. 85		
14	24600	102. 16	190000	2. 0		
17	21200	88. 00	190000	2. 4		
13	26400	109. 83	150000	1. 20		
17	21100	87. 86	150000	1. 50		
19	18800	78. 14	150000	1. 70	K 167	WSS37KW-4
22	16400	68. 07	150000	1. 95		
24	14600	60. 74	150000	2. 2		
28	12400	51. 77	150000	2. 6		
					K 157	WSS37KW-4
16	22000	91. 65	83600	0. 80	KF 157	WSS37KW-4
18	19200	79. 75	84500	0. 95	KA 157	WSS37KW-4
					KAF 157	WSS37KW-4

Output speed n_a [r/min] Скорость на выходном валу па [об/мин]	Output torque M_a [N・m] Крутящий момент на выходе Ма [Нм]	Ratio i Передат очное число i	Permitted overhung load F_{Ra} [N] Допустимая внешняя радиальная нагрузка FRa [H]	Service factor f_B Сервис-фактор fB		Model Модель
37kW						
21	16900	70.38	84800	1.05		
24	14700	61.02	84600	1.25	K 157	WSS37KW-4
27	13000	54.29	84100	1.40	KF 157	WSS37KW-4
31	11200	46.79	83200	1.60	KA 157	WSS37KW-4
39	9140	38.02	81300	1.95	KAF 157	WSS37KW-4
47	7520	31.30	79100	2.4		
23	15000	62.60	57500	0. 85	K 127	WSS37KW-4
27	13000	54.07	58500	1.00	KF 127	WSS37KW-4
31	11500	47.82	59000	1.15	KA 127	WSS37KW-4
37	9660	40.19	59100	1.35	KAF 127	WSS37KW-4
41	8710	36.25	59000	1.50		
47	7540	31.37	58500	1.70		
53	6650	27.68	57800	1.95		
62	5740	23.91	56900	2.3	K 127	WSS37KW-4
70	5080	21.15	56000	2.6	KF 127	WSS37KW-4
83	4270	17.77	54500	3.0	KA 127	WSS37KW-4
102	3450	14.35	52500	3.5	KAF 127	WSS37KW-4
115	3070	12.79	50200	2.8		
137	2580	10.74	48600	3.1		
169	2090	8.68	46600	3.5		
40	8890	37.00	29000	0. 80		
47	7520	31.28	33000	0. 90		
51	6970	29.00	34200	1. 05		
56	6320	26.32	34500	1. 15		
65	5440	22.62	34700	1. 30		
74	4740	19.74	34700	1. 50	K 107	WSS37KW-4
88	4020	16.75	34500	1. 75	KF 107	WSS37KW-4
100	3520	14.64	34200	1. 95	KA 107	WSS37KW-4
109	3230	13.43	32300	1. 35	KAF 107	WSS37KW-4
125	2820	11.73	32000	1. 55		
148	2390	9.94	31400	1. 75		
169	2090	8.69	30900	1. 95		
45kW						
6. 6	59800	221	172600	0. 85		
7. 6	52300	193	186100	1. 95	K 187RF107	WSS45KW-4
9. 0	44200	163	190000	1. 15		
11	36600	135	150000	0. 85	K 167RF107	WSS45KW-4
12	32000	118	150000	1. 00		
8. 2	52600	179. 86	185500	0. 95		
8. 9	48300	165. 21	190000	1. 05		
10	42300	144. 59	190000	1. 20		
11	37900	129. 69	190000	1. 30	K 187	WSS45KW-4
13	32900	112. 60	190000	1. 50		
14	29900	102. 16	190000	1. 65		
17	25700	88. 00	190000	1. 95		
20	21600	73. 96	187700	2. 3		
13	32100	109. 83	150000	1. 00		
17	25700	87. 86	150000	1. 25		
19	22800	78. 14	150000	1. 40		
22	19900	68. 07	150000	1. 60	K 167	WSS45KW-4
24	17800	60. 74	149000	1. 80		
28	15100	51. 77	145600	2. 1		
34	12500	42. 89	140600	2. 5		
21	20600	70. 38	76800	0. 85		
24	17800	61. 02	77700	1. 00		
27	15900	54. 29	77900	1. 15		
31	13700	46. 79	77800	1. 30	K 157	WSS45KW-4
39	11100	38. 02	76900	1. 60	KF 157	WSS45KW-4
47	9150	31. 30	75500	1. 95	KA 157	WSS45KW-4
53	8080	27. 62	74300	2. 2	KAF 157	WSS45KW-4
61	7000	23. 95	72800	2. 6		
69	6230	21. 31	71500	2. 9		
80	5370	18. 37	69700	3. 3		
					K 127	WSS45KW-4
31	14000	47. 82	52800	0. 95	KF 127	WSS45KW-4
37	11700	40. 19	53900	1. 10	KA 127	WSS45KW-4
41	10600	36. 25	54200	1. 25	KAF 127	WSS45KW-4
47	9170	31. 37	54400	1. 40		
53	8090	27. 68	54200	1. 60		
62	6990	23. 91	53800	1. 85	K 127	WSS45KW-4
70	6180	21. 15	53200	2. 1	KF 127	WSS45KW-4
83	5190	17. 77	52200	2. 5	KA 127	WSS45KW-4
102	4190	14. 35	50700	2. 9	KAF 127	WSS45KW-4
115	3740	12. 79	48300	2. 3		
137	3140	10. 74	47000	2. 5		
169	2540	8. 68	45300	2. 8		

Output speed n_a [r/min] Скорость на выходном валу па [об/мин]	Output torque M_a [N・m] Крутящий момент на выходе Ма [Нм]	Ratio i Передат очное число i	Permitted overhung load F_{Ra} [N] Допустимая внешняя радиальная нагрузка FRa [H]	Service factor f_B Сервис-фактор fB		Model Модель
45kW						
51	8480	29.00	25600	0.85	K 107	WSS45KW-4
56	7690	26.32	28300	0.95	KF 107	WSS45KW-4
65	6610	22.62	31000	1.10	KA 107	WSS45KW-4
74	5770	19.74	31700	1.25	KAF 107	WSS45KW-4
88	4890	16.75	31900	1.45		
100	4280	14.64	31900	1.60	K 107	WSS45KW-4
109	3930	13.43	29900	1.10	KF 107	WSS45KW-4
125	3940	11.73	29900	1.25	KA 107	WSS45KW-4
148	2910	9.94	29600	1.45	KAF 107	WSS45KW-4
169	2540	8.69	29300	1.60		
55kW						
10	51500	144.59	187400	0.95		
11	46200	129.69	190000	1.10		
13	40100	112.60	188500	1.25		
14	36400	102.16	187100	1.35	K 187	WSS55KW-4
17	31300	88.00	184200	1.60		
20	26300	73.96	180200	1.90		
23	22800	64.04	176300	2.0		
17	31300	87.86	145300	1.00		
19	27800	78.14	144600	1.15		
22	24200	68.07	143300	1.30		
24	21600	60.74	141700	1.50	K 167	WSS55KW-4
28	18400	51.77	139100	1.75		
34	15300	42.89	135400	2.1		
40	13000	36.61	131900	2.5		
24	21700	61.02	69000	0. 85		
27	19300	54.29	70200	0.95		
32	16700	46.79	71200	1.10		
39	13500	38.02	71500	1.35		
47	11100	31.30	71000	1.60	K 157	WSS55KW-4
53	9840	27.62	70400	1.85	KF 157	WSS55KW-4
62	8530	23.95	69400	2.1	KA 157	WSS55KW-4
69	7590	21.31	68400	2.4	KAF 157	WSS55KW-4
80	6540	18.37	67000	2.8		
99	5310	14.92	64800	3.4		
117	4510	12.65	62900	3.8		
37	14300	40.19	47400	0. 90	K 127	WSS55KW-4
47	11200	31.37	49300	1.15	KF 127	WSS55KW-4
53	9850	27.68	49700	1.30	KA 127	WSS55KW-4
					KAF 127	WSS55KW-4
62	8510	23.91	49900	1.55		
70	7530	21.15	49800	1.75	K 127	WSS55KW-4
83	6330	17.77	49300	2.0	KF 127	WSS55KW-4
103	5110	14.35	48300	2.4	KA 127	WSS55KW-4
115	4550	12.79	45900	1,85	KAF 127	WSS55KW-4
137	3830	10.74	45000	2.1		
170	3090	8.68	43600	2.3		
75kW						
11	62800	129.69	164100	0.80		
13	54500	112.60	166100	0.90		
14	49400	102.16	166600	1.00		
17	42600	88.00	166600	1.15		
20	35800	73.96	165300	1.40	K 187	WSS75KW-4
23	31000	64.04	163400	1.60		
28	25800	53.36	160100	1.95		
33	22000	45.50	156700	2.3		
19	37800	78.14	126100	0.85		
22	32900	68.07	127100	0.95		
24	29400	60.74	127300	1.10		
29	25100	51.77	126800	1.30		
35	20800	42.89	125200	1.55	K 167	WSS75KW-4
40	17700	36.61	123200	1.80		
46	15600	32.25	121300	2.0		
51	13900	28.77	119300	2.3		
60	11900	24.52	116300	2.7		
39	18400	38.02	60800	1.00		
47	15100	31.30	62200	1.20		
54	13400	27.62	62600	1.35	K 157	WSS55KW-4
62	11600	23.95	62600	1.55	KF 157	WSS55KW-4
69	10300	21.31	62400	1.75	KA 157	WSS55KW-4
81	8890	18.37	61800	2.0	KAF 157	WSS55KW-4
99	7220	14.92	60500	2.5		
117	6120	12.65	59300	2.8		
47	15200	31.37	39200	0.85		
53	13400	27.68	40800	0.95		
62	11600	23.91	42200	1.10		
70	10200	21.15	42900	1.25	K 127	WSS55KW-4
83	8600	17.77	43500	1.50	KF 127	WSS55KW-4
103	6940	14.35	43700	1.75	KA 127	WSS55KW-4
116	6190	12.79	41100	1.40	KAF 127	WSS55KW-4
138	5200	10.74	41000	1.55		
171	4200	8.68	40400	1.70		

Цилиндро-конические мотор-редукторы серии K/ K Helical-Bevel Geared Motor K
Committed to building a world-class electromechanical brand
СОЗДАЕМ ЭЛЕКТРОМЕХАНИЧЕСКИЙ БРЕНД МИРОВОГО КЛАССА

Output speed n_a [r/min] Скорость на выходном валу na [об/мин]	Output torque M_a [N・m] Крутящий момент на выходе Ma [Нм]	Ratio i Передаточное число i	Permitted overhung load F_{Ra} [N] Допустимая внешняя радиальная нагрузка FRa [Н]	Service factor f_B Сервис-фактор fB			Model Модель
90kW							
14	59300	102.16	151300	0.85			
17	51100	88.00	153400	0.95			
20	42900	73.96	154200	1.10			
23	37200	64.04	153800	1.25	K	187	WSS90KW-4
28	31000	53.36	152200	1.60			
33	26400	45.50	149900	1.90			
35	24700	42.51	148700	2.0			
38	22400	38.57	146900	2.2			
22	39500	68.07	115100	0.80			
24	35300	60.74	116600	0.90			
29	30100	51.77	117600	1.05			
35	24900	42.89	117600	1.30			
40	21300	36.61	116700	1.50	K	167	WSS90KW-4
46	18700	32.25	115500	1.70			
51	16700	28.77	114200	1.90			
60	14200	24.52	111900	2.2			
73	11800	20.32	108800	2.7			
85	10100	17.34	106000	3.2			
39	22100	38.02	52700	0.80			
47	18200	31.30	55500	1.00	K	157	WSS90KW-4
54	16000	27.62	56700	1.10	KF	157	WSS90KW-4
62	13900	23.95	57500	1.30	KA	157	WSS90KW-4
69	12400	21.31	57900	1.45	KAF	157	WSS90KW-4
81	10700	18.37	57900	1.70			
99	8670	14.92	57400	2.1			
117	7350	12.65	56600	2.3			
62	13900	23.91	36400	0.95			
70	12300	21.15	37800	1.05	K	127	WSS90KW-4
83	10300	17.77	39200	1.25	KF	127	WSS90KW-4
103	8330	14.35	40200	1.45	KA	127	WSS90KW-4
116	7420	12.79	37600	1.15	KAF	127	WSS90KW-4
138	6240	10.74	38000	1.30			
171	5040	8.68	38000	1.45			
110kW							
17	62300	88.00	136000	0.80			
20	52300	73.96	139500	0.95			
23	45300	64.04	141000	1.10			
28	37700	53.36	141500	1.30			
33	32200	45.50	140800	1.55	K	127	WSS110KW-4
35	30100	42.51	140200	1.65			
39	27300	38.57	139100	1.85			
45	23500	33.23	137000	2.1			
53	19800	27.92	134000	2.5			
29	36600	51.77	105500	0.85			
35	30300	42.89	107500	1.05			
41	25900	36.61	108100	1.25			
46	22800	32.25	107900	1.40			
52	20400	28.77	107400	1.55	K	167	WSS110KW-4
61	17300	24.52	106100	1.85			
73	14400	20.32	104000	2.2			
86	12300	17.34	101800	2.6			
62	16900	23.95	50800	1.05	K	157	WSS110KW-4
70	15100	21.31	51900	1.20	KF	157	WSS110KW-4
81	13000	18.37	52700	1.40	KA	157	WSS110KW-4
100	10600	14.92	53100	1.70	KAF	157	WSS110KW-4
117	8950	12.65	53000	1.90			
132kW							
20	62800	73.96	123300	0.80			
23	54400	64.04	127000	0.90			
28	45300	53.36	129800	1.10			
33	38600	45.50	130800	1.30			
35	36100	42.51	130900	1.40			
39	32700	38.57	130700	1.55	K	187	WSS110KW-4
45	28200	33.23	129800	1.75			
53	23700	27.92	127900	2.1			
61	20500	24.18	125900	2.3			
74	17100	20.15	122800	2.6			
86	14600	17.18	119700	2.8			
35	36400	42.89	96400	0.90			
41	31100	36.61	98600	1.05			
46	27400	32.25	99600	1.15			
52	24400	28.77	99900	1.30	K	167	WSS110KW-4
61	20800	24.52	99800	1.55			
73	17200	20.32	98700	1.85			
86	14700	17.34	97300	2.2			
62	20300	23.95	43400	0.90	K	157	WSS132KW-4
70	18100	21.31	45300	1.00	KF	157	WSS132KW-4
81	15600	18.37	47000	1.15	KA	157	WSS132KW-4
100	12700	14.92	48500	1.40	KAF	157	WSS132KW-4
117	10700	12.65	49100	1.60			

Output speed n_a [r/min] Скорость на выходном валу na [об/мин]	Output torque M_a [N・m] Крутящий момент на выходе Ma [Нм]	Ratio i Передаточное число i	Permitted overhung load F_{Ra} [N] Допустимая внешняя радиальная нагрузка FRa [Н]	Service factor f_B Сервис-фактор fB			Model Модель
160kW							
28	54900	53.36	114900	0.90			
33	46800	45.50	118100	1.05			
45	34200	33.23	120500	1.45			
53	28700	27.92	120100	1.75	K	187	WSS60KW
61	24900	24.18	119100	1.90			
74	20700	20.15	117200	2.1			
86	17700	17.18	114900	2.3			
41	37700	36.61	86500	0.85			
61	25200	24.52	91700	1.25	K	167	WSS160KW-4
73	20900	20.32	92000	1.55			
86	17800	17.34	91600	1.80			
81	18900	18.37	39800	0.95	K	157	WSS160KW-4
100	15400	14.92	42600	1.15	KF	157	WSS160KW-4
117	13000	12.65	44100	1.30	KA	157	WSS160KW-4
					KAF	157	WSS160KW-4
200kW							
33	58500	45.50	100000	0.85			
45	42700	33.23	107300	1.15			
53	35900	27.92	109000	1.40	K	187	WSS200KW-4
61	31100	24.18	109500	1.55			
74	25900	20.15	109100	1.70			
86	22100	17.18	108100	1.85			
61	31500	24.52	80100	1.00			
73	26100	20.32	82400	1.20	K	167	WSS200KW-4
86	22300	17.34	83400	1.45			
					K	157	WSS200KW-4
100	19200	14.92	34200	0.95	KF	157	WSS200KW-4
117	16300	12.65	36900	1.05	KA	157	WSS200KW-4
					KAF	157	WSS200KW-4

K37..~K157..

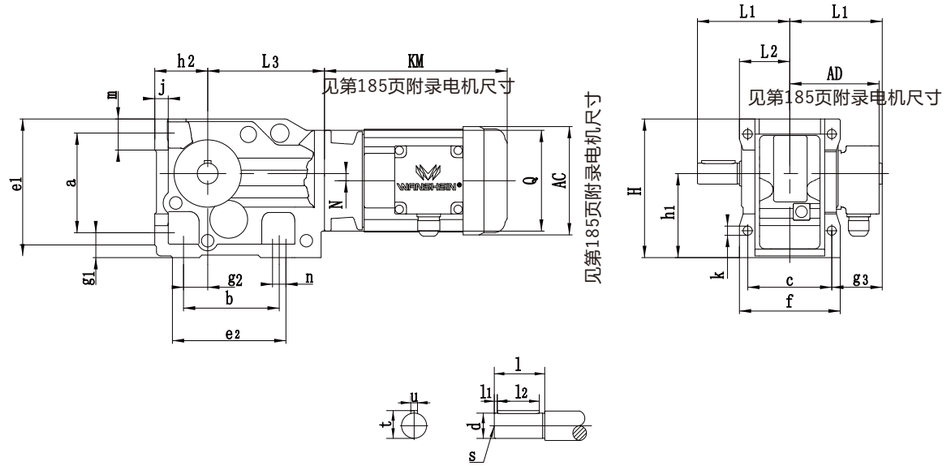

KA37B..~KA157B..

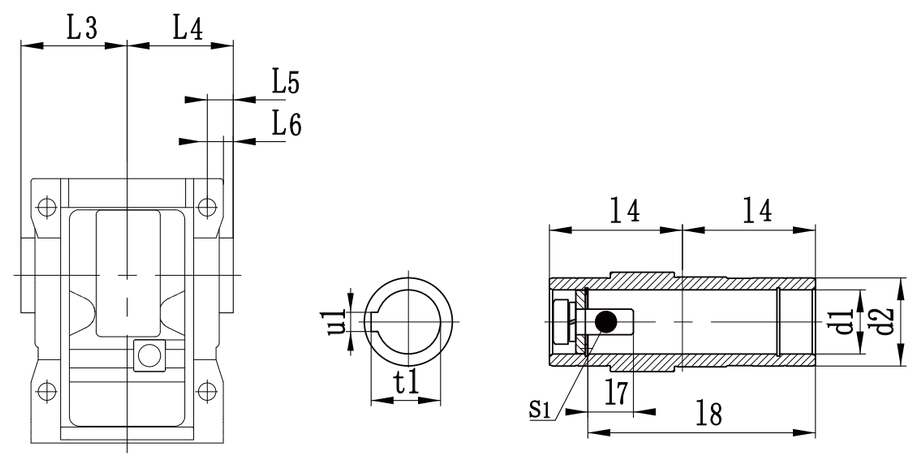

Размер Size	a b c	e1 e2 f	g1 g2 g3	h1 h2	j	k	m n	Shaft dimension Габариты вала				
								d	l	l1 l2	s	t u
K37.. KA37B..	115 110 100	150 143 120	32 28 60	$100_{-0.5}$ $63_{-0.5}$	16	11	37 38	25k6	50	5 40	M10	28 8
K47.. KA47B..	130 130 120	170 162 145	37 35 75	$112_{-0.5}$ $71_{-0.5}$	18	11	37 32	30k6	60	3.5 50	M10	33 8
K57.. KA57B..	150 130 130	190 172 157	45 30 88	$132_{-0.5}$ $80_{-0.5}$	21	13.5	43 30	35k6	70	7 56	M12	38 10
K67.. KA67B..	160 120 140	203 170 170	45 30 101	$140_{-0.5}$ $90_{-0.5}$	24	13.5	43 45	40k6	80	5 70	M16	43 12
K77.. KA77B..	200 150 165	263 208 200	55 40 123.5	$180_{-0.5}$ $112_{-0.5}$	27	17.5	55 55	50k6	100	10 80	M16	53.5 14
K87.. KA87B..	233 180 180	305 260 230	70 55 150	$212_{-0.5}$ $132_{-0.5}$	32	22	67 75	60m6	120	5 110	M20	64 18
K97.. KA97B..	295 240 240	372 294 290	75 75 171	265_{-1} $160_{-0.5}$	36	26	82 60	70m6	140	7.5 125	M20	74.5 20
K107.. KA107B..	360 280 270	448 380 340	95 95 212	315_{-1} $200_{-0.5}$	40	33	98 100	90m6	170	5 160	M24	95 25
K127.. KA127B..	420 350 330	526 440 400	110 115 253	375_{-1} $225_{-0.5}$	45	39	111 100	110m6	210	15 180	M24	116 28
K157.. KA157B..	500 380 420	634 480 500	130 140 247	450_{-1} $280_{-0.5}$	50	39	130 100	120m6	210	5 200	M24	127 32

Размер Size	Hollow shaft dimension Габариты полого вала							H	L1 L2	L3	N	Q
	d1	d2	l3 l4	l5 l6	l7 l8	s1	t1 u1					
K37.. KA37B..	—	—	—	—	—	—	—	165	110 60	139	8.5	120
K47.. KA47B..	35^{H7}	50	78 75	15 3	22 132	M12X30	38.3 10	185	135 72	166	7.2	160
K57.. KA57B..	40^{H7}	55	86 83	18 3	29 142	M16X40	43.3 12	217	153 80	173	13.1	160
K67.. KA67B..	40^{H7}	55	93 90	20 3.5	29 156	M16X40	43.3 12	228	171 86.5	179	20	160
K77.. KA77B..	50^{H7}	70	108 105	22.5 4	32 183	M16X45	53.8 14	288	206 101	202	31.3	200
K87.. KA87B..	60^{H7}	85	123 120	30 4	36 210	M20X50	64.4 18	340	240 116	257	25.9	250
K97.. KA97B..	70^{H7}	95	153 150	30 4	34 270	M20X50	74.9 20	417	291 146	277	32.3	300
K107.. KA107B..	90^{H7}	118	178 175	40 2.5	40 313	M24X60	95.4 25	503	347 175	341	52	350
K127.. KA127B..	100^{H7}	135	208 205	40 2.5	38 373	M24X60	106.4 28	592	418 203	390	53	450
K157.. KA157B..	120^{H7}	155	253 250	40	36 460	M24X60	127.4 32	705	457 250	426	71.7	550

Цилиндро-конические мотор-редукторы серии K/ K Helical-Bevel Geared Motor K
Committed to building a world-class electromechanical brand
СОЗДАЕМ ЭЛЕКТРОМЕХАНИЧЕСКИЙ БРЕНД МИРОВОГО КЛАССА

KA37/T..~KA107

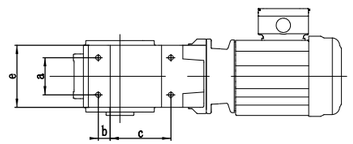

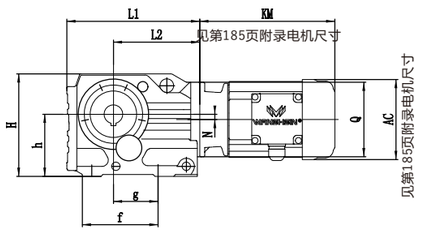

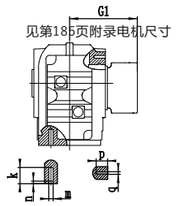

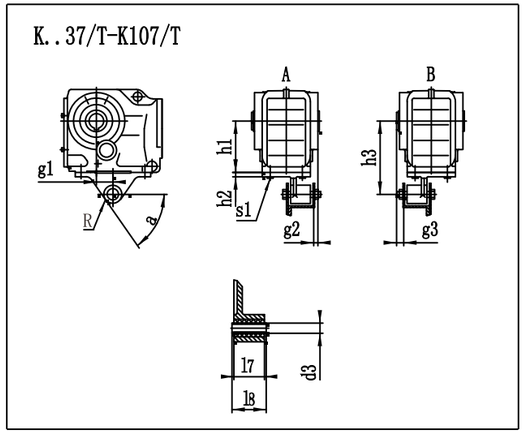

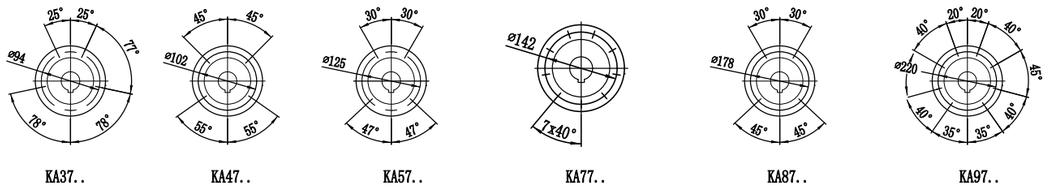

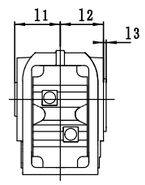

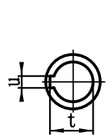

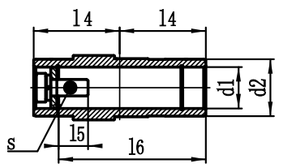

Размер Size	a b c	e f g	h	k m n	p q	Габариты вала Hollow shaft dimension				Форма моментного рычага Torque arm form				H L_2 L_3	N Q
						d_1 d_2	l_1 l_1 l_2	l_4 l_5 l_6	s t u	g_1 g_2 g_3	h_1 h_2 h_3	d_3 l_7 l_8	r s_1 ∞		
KA 37.. K..37/T..	60 35 82	100 147 97	100-0.5	20 M10 4	12 M8	30^{H7} 45	63 60 2.5	60 17 105	M10 33.3 8	23.5 20 20	$100_{-0.5}$ 10 $140^{+0.2}_{-0.7}$	$10.4_{\pm 0.1}$ 31 $36_{-0.3}$	22.5 M10X25 60°	164 210 139	8.5 120
KA 47.. K..47/T..	70 40 100	110 170 115	112-0.5	20 M10 4	12 M8	35^{H7} 50	78 75 3	75 22 132	M12 38.3 10	30 20 20	$112_{-0.5}$ 12 $160^{+0.2}_{-0.7}$	$10.4_{\pm 0.1}$ 31 $36_{-0.3}$	22.5 M10X30 55°	185 243 166	7.2 160
KA 57.. K..57/T..	88 47 105	122 182 120	132-0.5	25 M12 5	20 M12	40^{H7} 55	86 83 3	83 29 142	M16 43.3 12	40 18 18	$132_{-0.5}$ 13 $192^{+0.2}_{-0.7}$	$16.4_{\pm 0.08}$ 54 $60_{-0.3}$	29 M12X35 55°	215 269 173	13.1 160
KA 67.. K..67/T..	88 42 110	130 182 125	140-0.5	25 M12 5	20 M12	40^{H7} 55	94 90 3.5	90 29 156	M16 43.3 12	45 25 25	$140_{-0.5}$ 13 $200^{+0.2}_{-0.7}$	$16.4_{\pm 0.08}$ 54 $60_{-0.3}$	29 M12X35 55°	226 274 179	20 160
KA 77.. K..77/T..	102 48 122	154 204 139	180-0.5	32 M16 6	20 M12	50^{H7} 70	108 105 4	105 32 183	M16 53.8 14	52.5 25 25	$180_{-0.5}$ 14 $250^{+0.2}_{-0.7}$	$16.4_{\pm 0.08}$ 54 $60_{-0.3}$	29 M16X40 60°	286 312 202	31.3 200
KA 87.. K..87/T..	118 65 160	170 280 190	212-0.5	32 M16 6	26 M16	60^{H7} 85	123 120 4	120 36 4	M20 64.4 18	60 30 30	$212_{-0.5}$ 16 $300^{+0.2}_{-0.7}$	$25_{\pm 0.08}$ 72 $80_{-0.3}$	41 M16X45 60°	338 390 257	25.9 250
KA 97.. K..97/T..	160 83 165	226 298 190	265-1	36 M20 6	26 M16	70^{H7} 95	153 150 4	150 34 270	M20 74.9 20	70 40 40	265_{-1} 17 $350^{+0.2}_{-1.2}$	$25_{\pm 0.08}$ 92 $100_{-0.3}$	41 M20X50 50°	414 435 277	32.3 300
KA 107.. K..107/T..	190 100 190	266 370 230	315-1	44 M24 8	- -	90^{H7} 118	178 175 2.5	175 40 313	M24 95.4 25	74 45 45	315_{-1} 20 $450^{+0.5}_{-1.5}$	$25_{\pm 0.08}$ 92 $100_{-0.3}$	41 M24X60 55°	500 537 341	52 350

Цилиндро-конические мотор-редукторы серии К/ K Helical-Bevel Geared Motor K
Committed to building a world-class electromechanical brand
СОЗДАЕМ ЭЛЕКТРОМЕХАНИЧЕСКИЙ БРЕНД МИРОВОГО КЛАССА

KF37..~KF157..

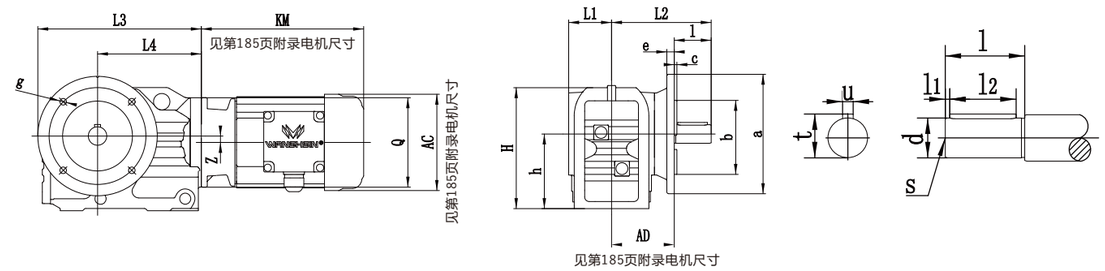

KAF37..~KAF157..

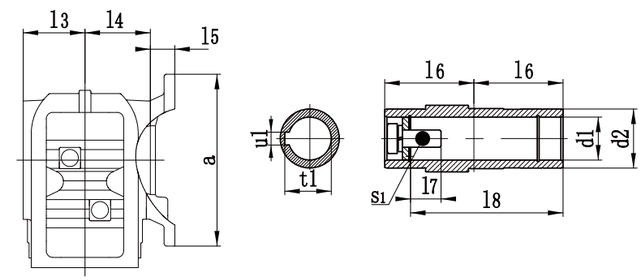

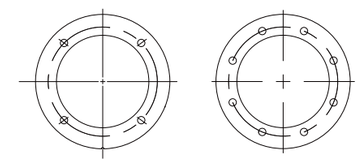

Flg. 1
Рис. 1

Flg. 2
Рис.2

Форма фланца
Flange form

Размер	Тип Фланца	a b	c e	f g h	Цельный вал d l	l_1 l_3	s	t u	Размер полого вала d_1 d_2	l_3 l_4 l_5	l_6 l_7 l_8	s_1	t_1 u_1	H	l_1 l_2 l_3	l_4 N Q
KF37.. KAF37..	Flg.1	160 110j6	3.5 10	130 9 100	25k6 50	5 40	M10	28 8	30^{H7} 55	63 60 24	60 17 105	M10x25	33.3 8	164	57.5 134 210	139 8.5 120
KF47.. KAF47..	Flg.1	200 130j6	3.5 10	165 11 112	30k 60	3.5 50	M10	33 8	35^{H7} 52	78 75 25	75 22 132	M12x30	38.3 10	185	72 160 243	166 7.2 160
KF57.. KAF57..	Flg.1	250 180j6	4 15	215 13.5 132	35k6 70	7 56	M12	33 10	40^{H7} 55	86 83 23.5	83 29 142	M16x40	43.3 12	215	80 177 269	173 13.1 160
KF67.. KAF67..	Flg.1	250 180j6	4 15	215 13.5 140	40k6 80	5 70	M16	43 12	40^{H7} 55	94 90 23	90 29 156	M16x40	43.3 12	226	86.5 193 274	179 20 160
KF77.. KAF77..	Flg.1	300 230j6	4 16	265 13.5 180	50k6 100	80 10	M16	53.5 14	50^{H7} 70	108 105 37	105 32 183	M16x45	53.8 14	286	101 242 312	202 31.3 200
KF87.. KAF87..	Flg.1	350 250h6	5 18	300 17.5 212	60m6 120	5 110	M20	64 18	60^{H7} 85	123 120 30	120 36 210	M20x50	64.4 18	338	138 270 390	257 25.9 250
KF97.. KAF97..	Flg.2	450 350h6	5 22	400 17.5 265	70m6 140	7.5 125	M20	74.5 20	70^{H7} 95	153 150 41.5	150 34 270	M20x50	74.9 20	414	171 332 435	277 32.3 300
KF107.. KAF107..	Flg.2	450 350h6	5 25	400 17.5 315	90m6 170	5 160	M24	95 25	90^{H7} 118	178 175 41	175 40 313	M24x60	95.4 25	500	175 386 537	341 52 350

KA127..

KA127..

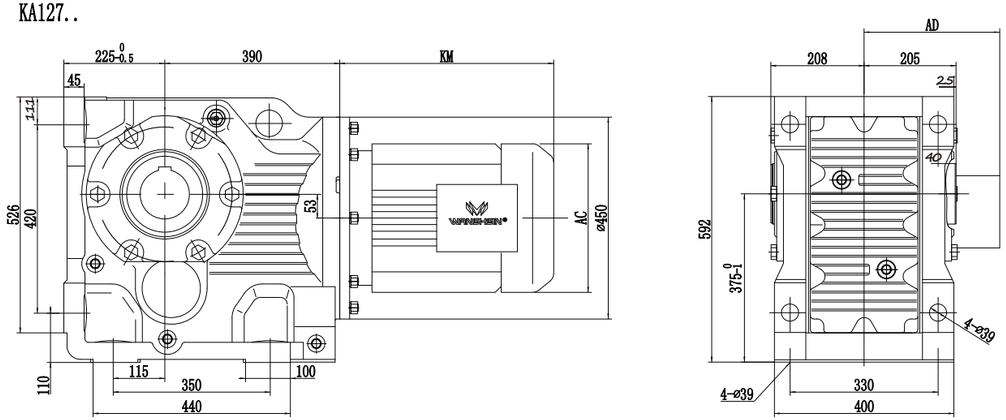

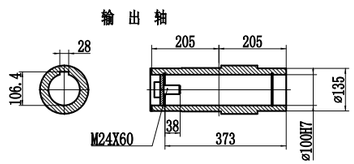

K..127/T..

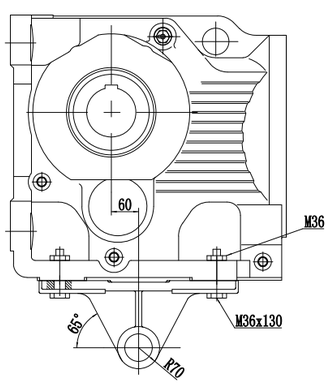

A

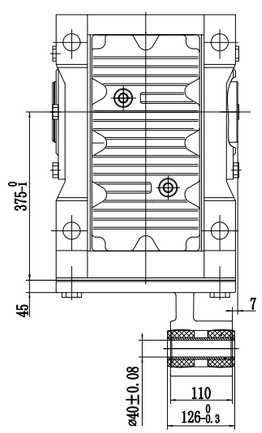

B

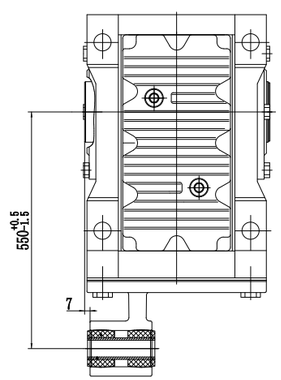

Цилиндро-конические мотор-редукторы серии К/ K Helical-Bevel Geared Motor K
Committed to building a world-class electromechanical brand
СОЗДАЕМ ЭЛЕКТРОМЕХАНИЧЕСКИЙ БРЕНД МИРОВОГО КЛАССА

KA157..

KA157..

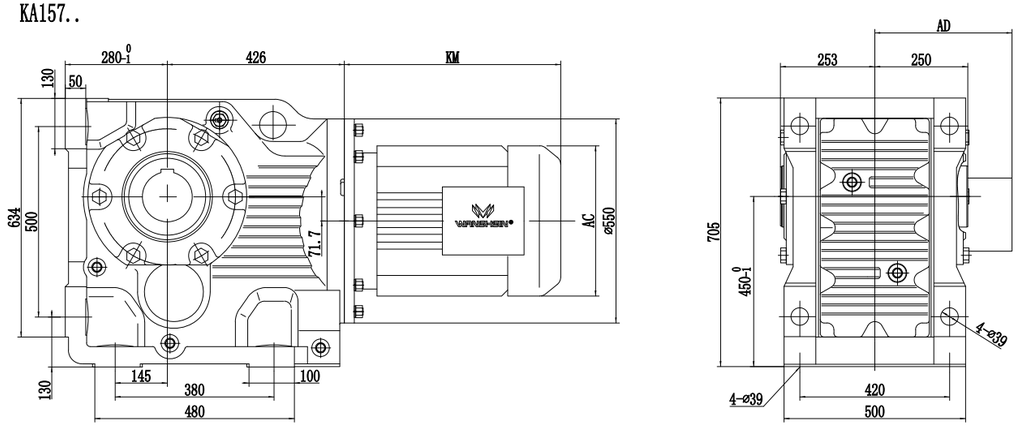

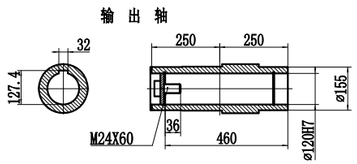

K..157/T..

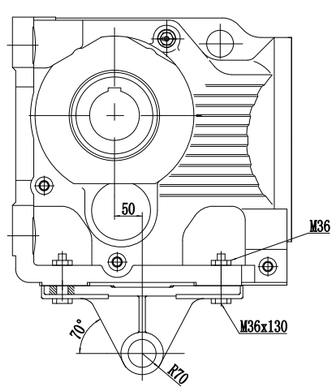

A

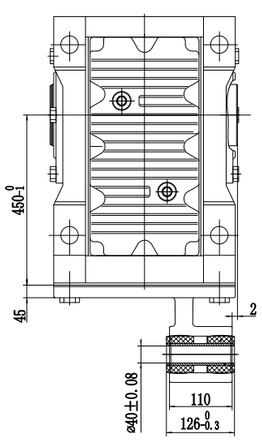

B

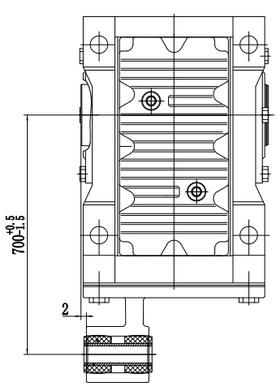

KA167..

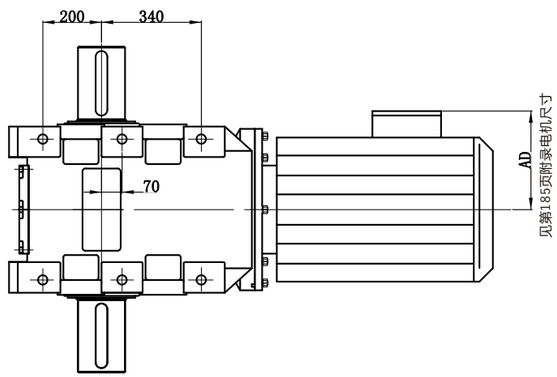

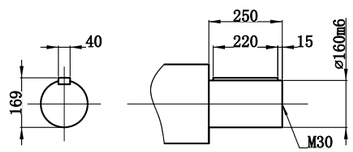

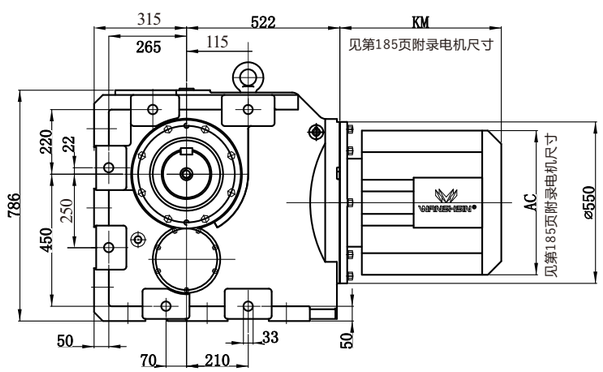

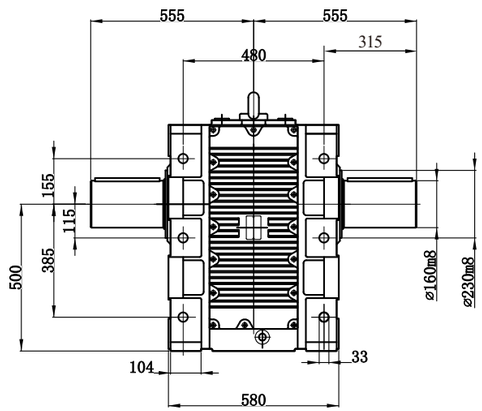

Цилиндро-конические мотор-редукторы серии К/ K Helical-Bevel Geared Motor K
Committed to building a world-class electromechanical brand
СОЗДАЕМ ЭЛЕКТРОМЕХАНИЧЕСКИЙ БРЕНД МИРОВОГО КЛАССА

KA187..

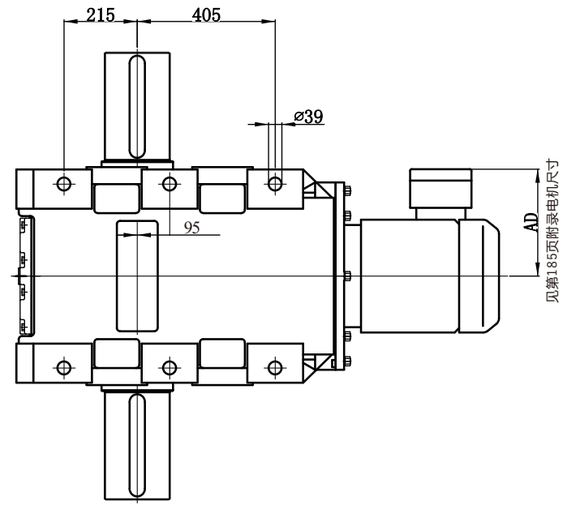

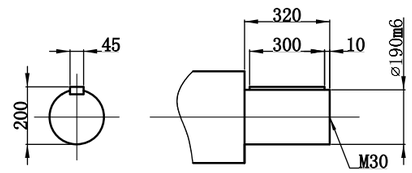

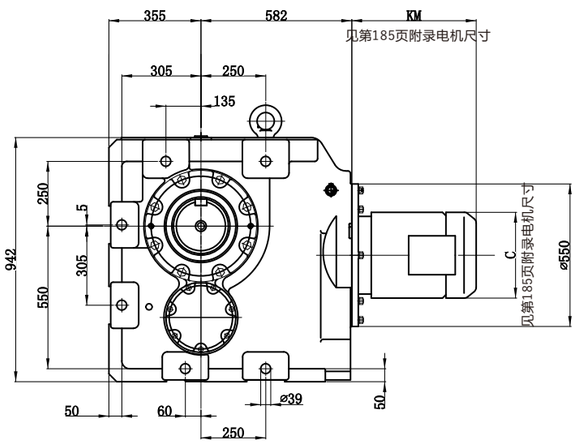

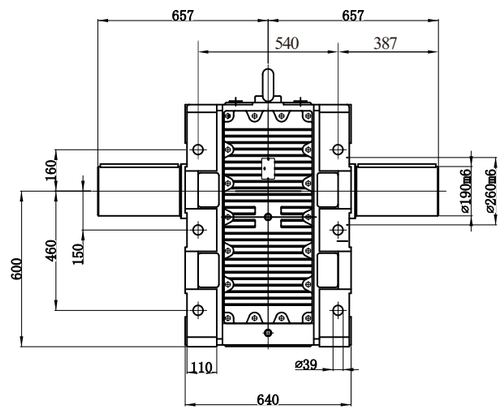

K..AD..

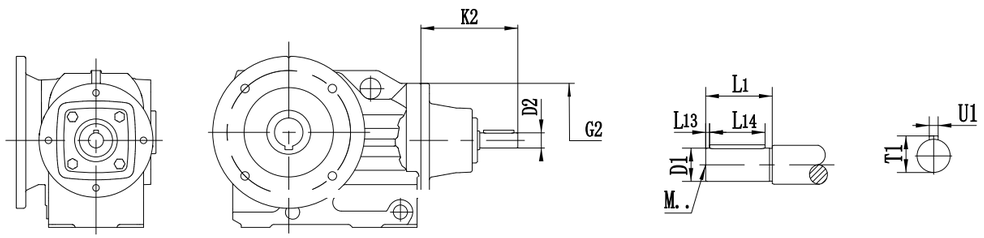

		G2	K2	D1	L1	L13	L14	T1	U1	M
K..37	AD1	120	102	16	40	4	32	18	5	M5
	AD2		130	19	40	4	32	21.5	6	M6
K..47 K..57 K..67	AD2	160	123	19	40	4	32	21.5	6	M6
	AD3		159	24	50	5	40	27	8	M8
K..77	AD2	200	116	19	40	4	32	21.5	6	M6
	AD3		151	24	50	5	40	27	8	M8
	AD4		224	38	80	5	70	41	10	M12
K..87	AD2	250	111	19	40	4	32	21.5	6	M6
	AD3		156	28	60	5	50	31	8	M10
	AD4		219	38	80	5	70	41	10	M12
	AD5		292	42	110	10	70	45	12	M16
K..97	AD3	300	151	28	60	5	50	31	8	M10
	AD4		214	38	80	5	70	41	10	M12
	AD5		287	42	110	10	70	45	12	M16
	AD6		327	48	110	10	80	51.5	14	M16
K..107	AD3	350	145	28	60	5	50	31	8	M10
	AD4		208	38	80	5	70	41	10	M12
	AD5		281	42	110	10	70	45	12	M16
	AD6		321	48	110	10	80	51.5	14	M16
K..127	AD4	450	193	38	80	5	70	41	10	M12
	AD5		266	42	110	10	70	45	12	M16
	AD6		306	48	110	10	80	51.5	14	M16
	AD7		300	55	110	10	90	59	16	M20
	AD8		383	70	140	15	110	74.5	20	M20
K..157 K..167 K..187	AD5	550	258	42	110	10	70	45	12	M16
	AD6		298	48	110	10	80	51.5	14	M16
	AD7		292	55	110	10	90	59	16	M20
	AD8		374	70	140	15	110	74.5	20	M20

Цилиндро-конические мотор-редукторы серии К/ K Helical-Bevel Geared Motor K
Committed to building a world-class electromechanical brand
СОЗДАЕМ ЭЛЕКТРОМЕХАНИЧЕСКИЙ БРЕНД МИРОВОГО КЛАССА

K..AM..

Рис. 1
Fig. 1

Рис. 2
Fig. 2

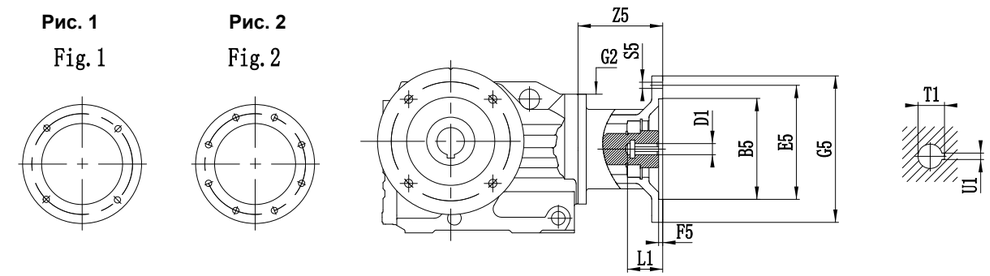

			B5	E5	F5	G2	G5	S5	Z5	D1	L1	T1	U1
K..37	AM63	Fig1	95	115	3.5	120	140	M8	72	11	23	12.8	4
	AM71″	1	110	130			160			14	30	16.3	5
	AM80″		130	165	4.5		200	M10	106	19	40	21.8	6
	AM90″									24	50	27.3	8
K..47 K..57 K..67	AM63	1	95	115	3.5	160	140	M8	66	11	23	12.8	4
	AM71		110	130			160			14	30	16.3	5
	AM80		130	165	4.5		200	M10	99	19	40	21.8	6
	AM90									24	50	27.3	8
	AM100″		180	215	5		250	M12	134	28	60	31.3	8
	AM112″												
K..77	AM63	1	95	115	3.5	200	140	M8	60	11	23	12.8	4
	AM71		110	130			160			14	30	16.3	5
	AM80		130	165	4.5		200	M10	92	19	40	21.8	6
	AM90									24	50	27.3	8
	AM100″		180	215	5		250	M12	126	28	60	31.3	8
	AM112″												
	AM132S″ AM132M″ AM132ML		230	265	5		300		179	38	80	41.3	10
K..87	AM80	1	130	165	4.5	250	200	M10	87	19	40	21.8	6
	AM90									24	50	27.3	8
	AM100 AM112		180	215	5		250	M12	121	28	60	31.3	8
	AM132S AM132M AM132ML		230	265			300		174	38	80	41.3	10
	AM160″		250	300	6		350	M16	232	42	110	45.3	12
	AM180″									48		51.8	14
K..97	AM100 AM112	1	180	215	5	300	250	M12	116	28	60	31.3	8
	AM132S AM132M AM132ML		230	265			300		169	38	80	41.3	10
	AM160		250	300	6		350	M16	227	42	110	45.3	12
	AM180									48		51.8	14
	AM200"		300	350			400		268	55		59.3	16
	AM225"	2	350	400	7		450		283	60	140	64.4	18

1). K G5/2

K..AM..

Рис. 1
Fig. 1

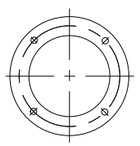

Рис. 2
Fig. 2

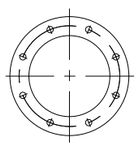

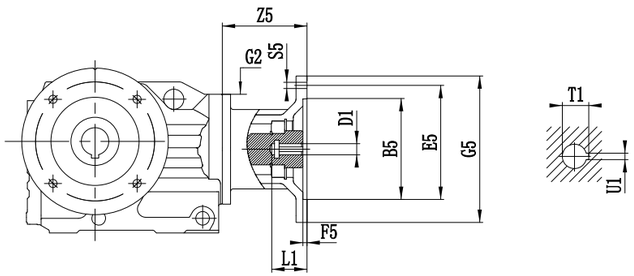

		Fig	B5	E5	F5	G2	G5	S5	Z5	D1	L1	T1	U1
K..107	AM100	1	180	215	5	350	250	M12	110	28	60	31.3	8
	AM112												
	AM132S		230	265			300		163	38	80	41.3	10
	AM132M												
	AM132ML												
	AM160		250	300	6		350	M16	221	42	110	45.3	12
	AM180									48		51.8	14
	Am200		300	350			400		262	55		59.3	16
	Am225	2	350	400	7		450		277	60	140	64.4	18
K..127	AM132S	1	230	265	5	450	300	M12	148	38	80	41.3	10
	AM132M												
	AM132ML												
	AM160		250	300	6		350	M16	206	42	110	45.3	12
	AM180									48		51.3	14
	AM200		300	350	7		400		247	55		59.3	16
	AM225	2	350	400			450		262	60	140	64.4	18
	AM250		450	500			550		336	65		49.4	
	AM280									75		79.9	20
K..157 K..167 K..187	AM160	1	250	300	6	550	350	M16	198	42	110	45.3	12
	AM180									48		51.8	14
	AM200		300	350	7		400		239	55		59.3	16
	AM225	2	350	400			450		254	60	140	64.4	18
	AM250		450	500			550		328	65		69.4	
	AM280									75		79.9	20

Цилиндро-конические мотор-редукторы серии К/ K Helical-Bevel Geared Motor K
Committed to building a world-class electromechanical brand
СОЗДАЕМ ЭЛЕКТРОМЕХАНИЧЕСКИЙ БРЕНД МИРОВОГО КЛАССА

K..R..

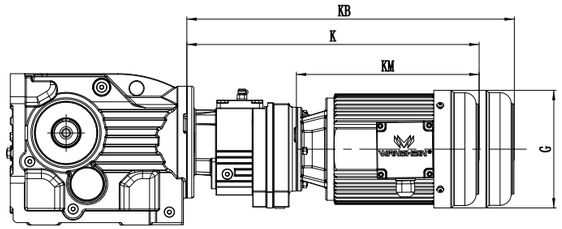

型号组合	功率（KW）	AC	K	KB	KM
K..47R37 K..57R37	0.18	129	371.5	408	206.5
	0.25-0.37	129	372/384.5	407.5/421	207/219.5
	0.55-0.75	169	411.5/412	456.5/457	246.5/247
K..67R37	0.18	129	371.5	408	206.5
	0.25-0.37	129	372/384.5	407.5/421	207/219.5
	0.55-0.75	169	411.5/412	456.5/457	246.5/247
	1.1-1.5	192	463	508.5	298
K..77R37	0.18	129	363.5	400	206.5
	0.25-0.37	129	364/367.5	399.5/413	207/219.5
	0.55-0.75	169	403.5/404	448.5/449	246.5/247
	1.1-1.5	192	455	500.5	298
K..87R57	0.18	129	422.5	459	206.5
	0.25-0.37	129	423/433.5	458.5/472	207/219.5
	0.55-0.75	169	462.5/463	507.5/508	246.5/247
	1.1-1.5	192	514	559.5	298
	2.2	219	538.5	600.5	322.5
	3	219	538.5	600.5	322.5
K..97R57	0.18	129	417.5	454	206.5
	0.25-0.37	129	418/430.5	453.5/467	207/219.5
	0.55-0.75	169	475.5/458	502.5/503	246.5/247
	1.1-1.5	192	509	554.5	298
	2.2	219	533.5	595.5	322.5
	3	219	533.5	595.5	322.5
	4	219	549.5	611.5	338.5
K..107R77	0.18	129	453.5	490	206.5
	0.25-0.37	129	454/466.5	489.5/503	207/219.5
	0.55-0.75	169	493.5/494	538.5/539	246.5/247
	1.1-1.5	192	545	590.5	298
	2.2	219	569.5	631.5	322.5
	3	219	569.5	631.5	322.5
	4	219	585.5	647.5	338.5
	5.5	257	656	724	409
	7.5	257	699	767	452
	9.2	257	699	767	452
	11	318	755	855	508

型号组合	功率（KW）	AC	K	KB	KM
K..127R87	1.1-1.5	192	578	623.5	298
	2.2	219	602.5	664.5	322.5
	3	219	602.5	664.5	322.5
	4	219	618.5	680.5	338.5
	5.5	257	689	757	409
	7.5	257	732	800	452
	9.2	257	732	800	452
	11	318	788	888	508
	15	318	788	888	508
	18.5	380	844	944	564
K..157R97 K..167R97 K..187R97	0.55-0.75	169	571.5/572	616.5/617	246.5/247
	1.1-1.5	192	623	668.5	298
	2.2	219	647.5	709.5	322.5
	3	219	647.5	709.5	322.5
	4	219	663.5	725.5	338.5
	5.5	257	734	802	409
	7.5	257	777	845	452
	9.2	257	777	845	452
	11	318	833	933	508
	15	318	833	933	508
	18.5	380	889	989	564
K..157R107 K..167R107 K..187R107	2.2	219	704.5	766.5	322.5
	3	219	704.5	766.5	322.5
	4	219	720.5	782.5	338.5
	5.5	257	791	859	409
	7.5	257	834	902	452
	9.2	257	834	902	452
	11	318	890	990	508
	15	318	890	990	508
	18.5	380	946	1046	564

Примечание: габариты мотора, указанные в таблице, приведены в качестве справки. В случае особых требований просьба обратиться к производителю.
Notes:The dimension of motor in the above table is only reference.If you have special requirement, Please consult us.

S47-S97

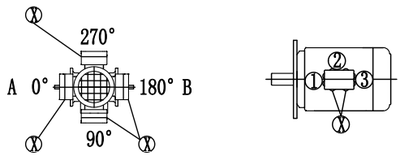

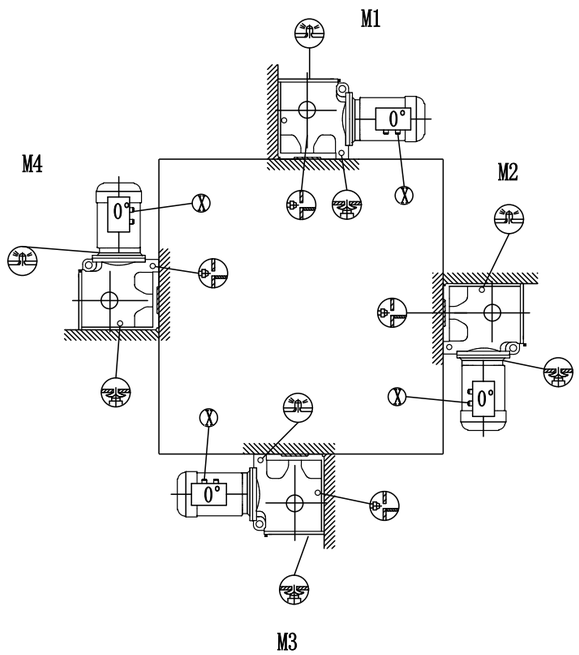

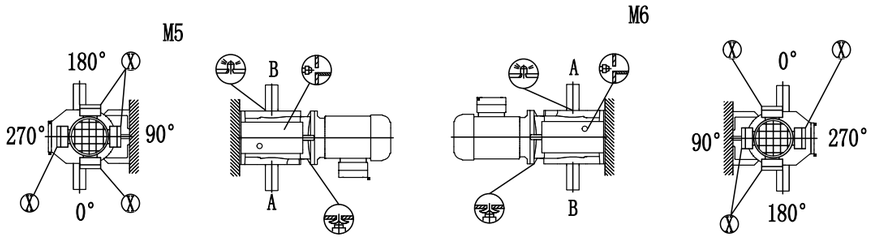

Важно: см. информацию в каталоге «Мотор-редукторы. Дополнительное планирование для мотор-редукторов с радиальной и осевой нагрузками». (стр. 21)
Important: Please refer to the information in the “Geared Motors” catalog. Optional Planning for gear units Ouerhung and axial loads part (P21)

Положение при монтаже/ Mounting Position

Committed to building a world-class
electromechanical brand
СОЗДАЕМ ЭЛЕКТРОМЕХАНИЧЕСКИЙ БРЕНД МИРОВОГО КЛАССА

SF/SAF/SHF37

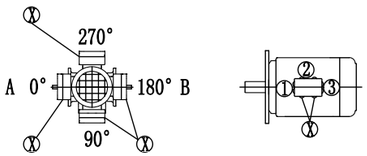

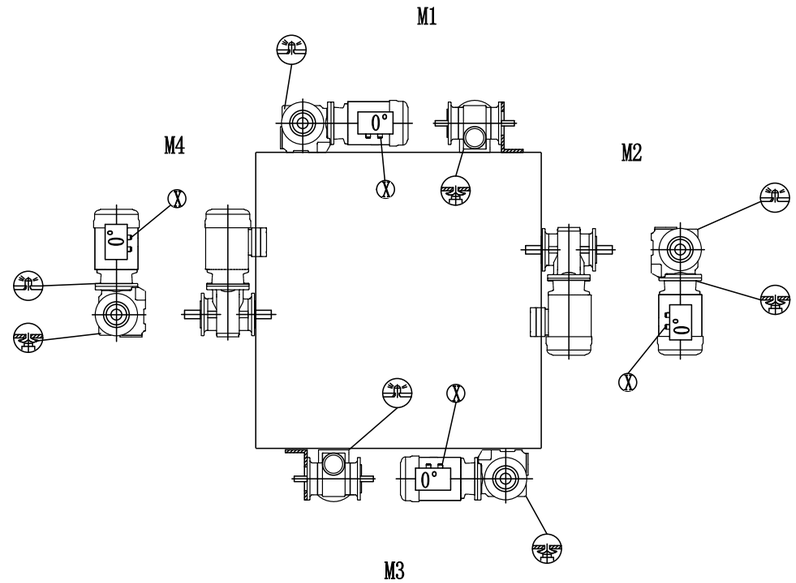

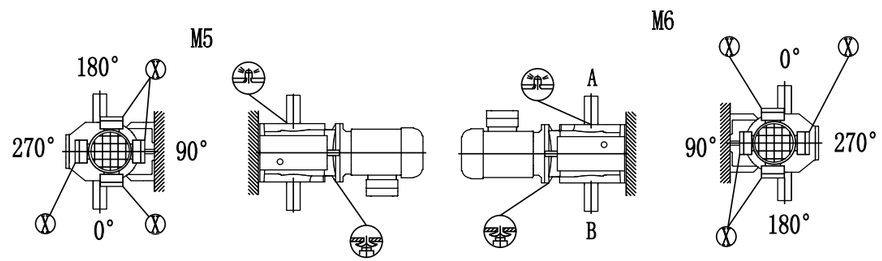

SF/SAF/SHF/SAZ/SHZ47..-97..

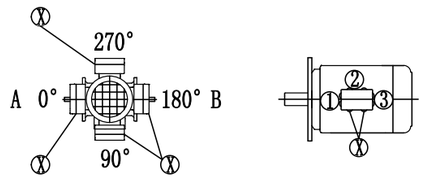

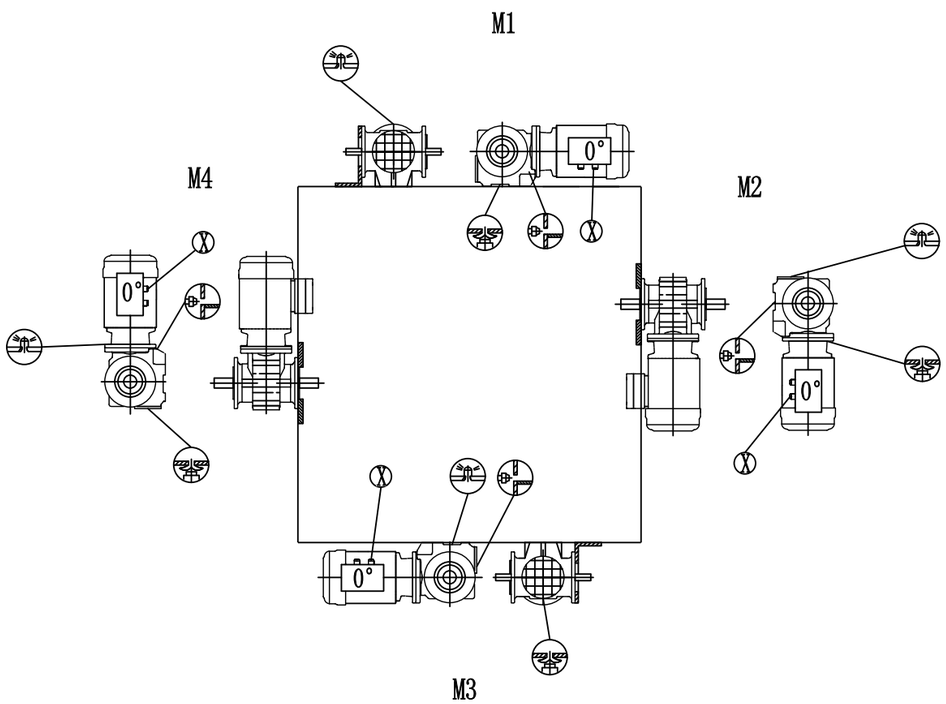

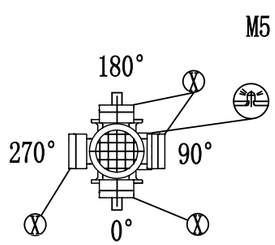

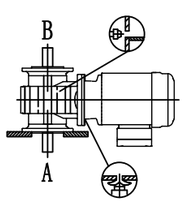

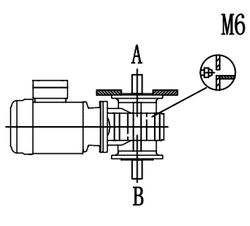

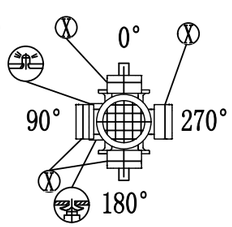

Положение при монтаже/ Mounting Position
Committed to building a world-class
electromechanical brand
СОЗДАЕМ ЭЛЕКТРОМЕХАНИЧЕСКИЙ БРЕНД МИРОВОГО КЛАССА

SA/SH37

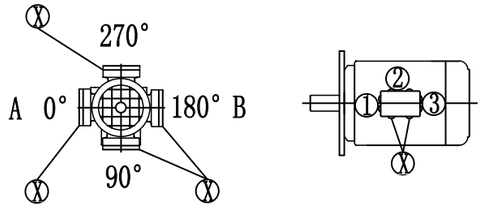

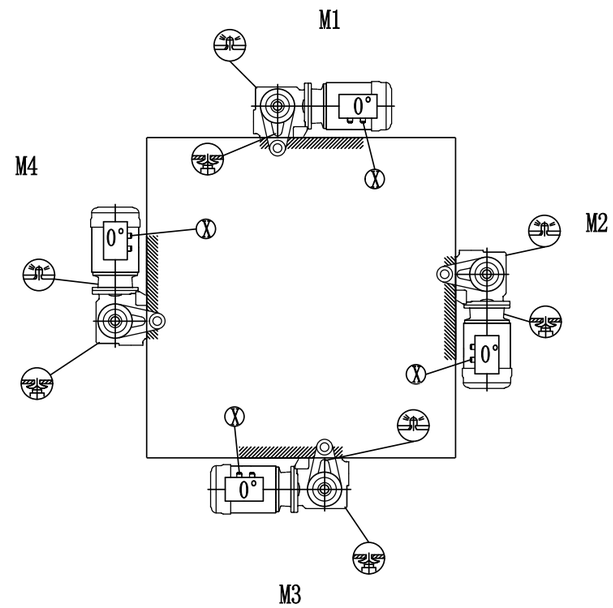

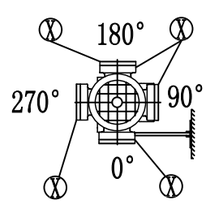

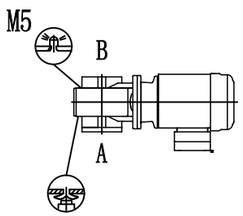

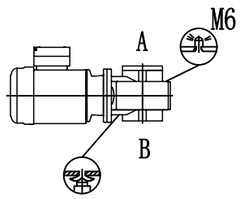

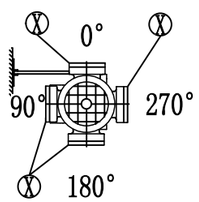

SA/SH47..-97..

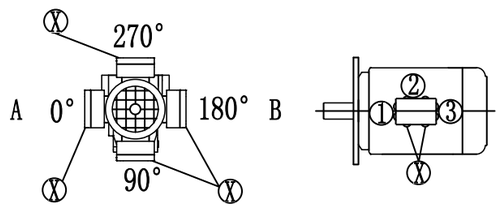

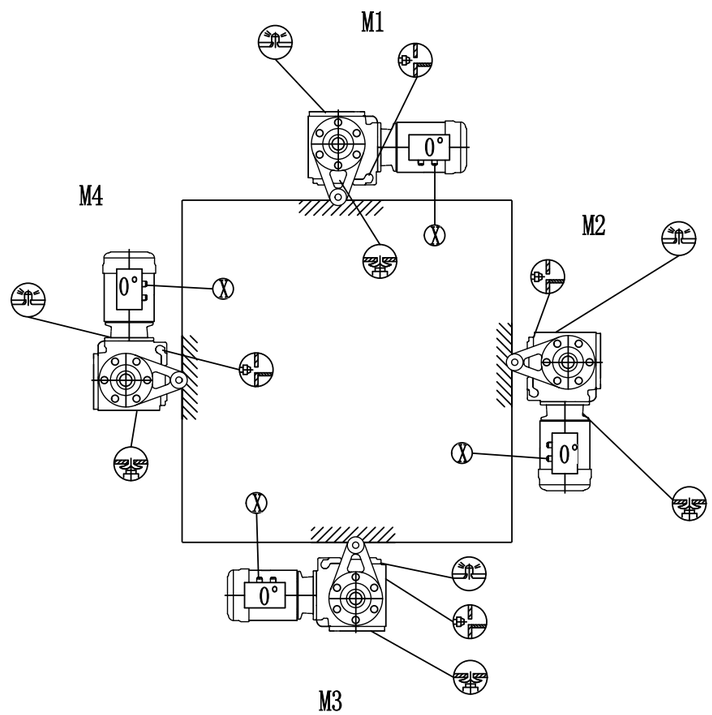

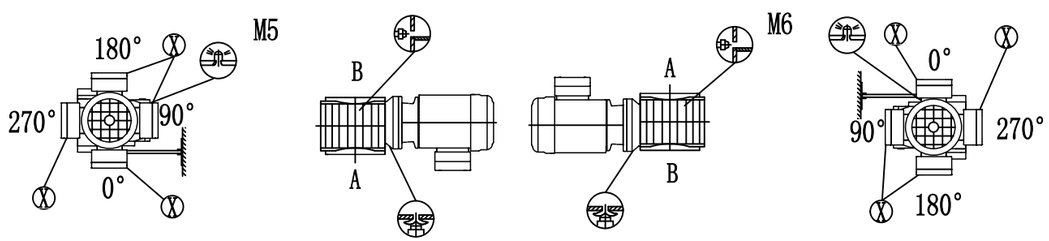

11.Information on dimension sheets
11.Информация о габаритных размерах

Классификация согласно области применения
Scope classification

=стандартные поставляемые детали Standard parts supplied by

= стандартные непоставляемыедеталиStandard parts unsupplied by

Допуски на высоту вала
Shaft heights tolerances

h . 250mm→-0.5mm
h 250mm→-1mm

Допуск для вала
Shaft tolerance

Мотор-редукторы, устанавливаемые на лапы: при установке необходимо убедиться, что мотор не выступает за установочную поверхность.
Foot-mounted gear unit: The motor may protrude above the mounting surface when fitting, please check.

Допуск на диаметр Diameter tolerance
50mm →ISOk6
50mm →ISOm6
DIN332DR:
Центральные отверстия по DIN332. Форма DR
Center holes in accordance with DIN332.shape DR

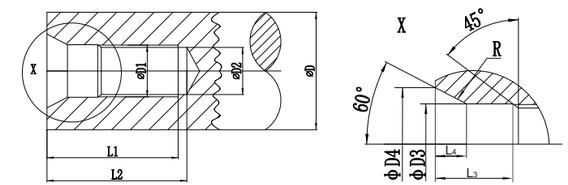

D Diameter or Output shaft Диаметр или выходной вал	D_1	D_2	D_3	D_4	R	L_1 +2	L_2 min	L_3	L_4
D=7-10mm	M3	2.5	3.2	5.3	4.0	9.0	12.0	2.6	1.8
D>10-13mm	M4	3.3	4.3	6.7	5.0	10.0	14.0	3.2	2.1
D>13-16mm	M5	4.2	5.3	8.1	6.3	12.5	17.0	4.0	2.4
D>16-21mm	M6	5.0	6.4	9.6	8.0	16.0	21.0	5.0	2.8
D>21-24mm	M8	6.8	8.4	12.2	10.0	19.0	25.0	6.0	3.3
D>24-30mm	M10	8.5	10.5	14.9	16.0	22.0	30.0	7.5	3.8
D>30-38mm	M12	10.2	13.0	18.1	20.0	28.0	37.0	9.5	4.4
D>38-50mm	M16	14.0	17.0	23.0	25.0	36.0	45.0	12.0	5.2
D>50-85mm	M20	17.5	21.0	28.4	31.5	42.0	53.0	15.0	6.4
D>85-130mm	M24	21.0	25.0	34.2	40.0	50.0	63.0	18.0	8.0
D>130mm	M30	26.5	31.0	42.6	50.0	63.0	85.0	20.0	10.0

Hollow shaft

Полый вал шпонки: по DIN6885 (выпуклой формы)
keys: In accordance with DIN6885(domed type)
Допуск на диаметр
Diameter tolerance
ISOH7 measured with plug gauge
ISOH7 измеряется калиберной пробкой

Фланец
Flange

Допуск на соединения
Rabbet tolerance

230mm(flange size A120-A300)→ISOj6
230mm(flange size A350-A660)→ISOh6

Для каждого размера цилиндрического редуктора переменного тока (двигатель с тормозом) и взрывозащищенного двигателя переменного тока (двигатель с тормозом) имеется до 3 размеров фланца. Размеры фланцев указаны в соответствующей таблице габаритных размеров.
Up to three different flange dimensions are available for each size of helical gear units AC (brake)motor and explosion-proof AC(brake)motor. The possible flanges per size are indicted in the relevant dimension sheets.

Рым-болты, проушины для подвешивания
Lifting eyebolts, suspension eye lugs

Моторы до DV100 и мотор-редукторы Spiroplan поставляются без специальных крепежных приспособлений при транспортировке. Другие мотор-редукторы оснащены литыми,вкручивающимися проушинами или вкручивающимисярым-болтами.
Motors up to DV 100 and Spiroplan geared motors are delivered without specialreansport fixtures. Otherwise, the gear units and motors are equipped with cast-on suspension eye lugs,screw-on suspension eye lugs or sceew-on lifting eyebolts.

Тип редуктора/мотора Gear unit/motor type	Вкручивающиесярым-болты/проушины для подвешивания Screw-on litting eyebolts / suspension eye lugs	Cast-on suspension eye lugs Литые проушины
R/RF37-57	•	–
R67	•	–
F37-107	–	•
K37-107	–	•
S37-47	•	–
S57-97	–	•
DV112	•	–

Воздушныеклапаны
Breather valves

На чертежах редуктора с указанием размеров всегда указаны резьбовые пробки. Соответствующая пробка заменяется воздушным клапаном при сборке на заводе в зависимости от указываемого при заказе положения монтажа M1-M6. Это означает, что внешние габариты могут незначительно отличаться.
The gear unit dimension drawings are always shown with screw plugs. The corresponding sc - rew plug is replaced by an breather valve at the factory depending on with mounti-ngposition M1-M6 is ordered. This means the contour dimensions may be slightly different

Стяжная муфта
Shrink disk connection

Мотор-редуктор с полым валом и стяжной муфтой: при необходимости запросите подробные технические характеристики стяжных муфт (технические данные № 33 753..95).
Hollow shaft gear unit with shrink disk connection: If required please request a detailed data sheet on shrink disks form, data sheet no.33 753..95.

Двигательс тормозом
Brake motors

Двигатели автоматически блокируются тормозом при выключении питания
When automatic motor, KB for K

Дополнительные приспособления для двигателя
Motor accessory

В зависимости от дополнительных приспособлений габариты мотора могут отличаться (см размеры дополнительных приспособлений).
The motor dimensions may different as a result of motor accessory Please refer to the dimensions of the more accseeory.

Особое исполнение
Special applications

Размеры распределительной коробки при варианте исполнения KS или CSA могут отличаться от стандартных.
The dimensions of the terminal box on special applications such as KS or CSA may different form the standard dimensions.